A DUTCH SOLUTION TO PREVENT SCALING PROBLEMS ON CONCRETE BLOCKS

J. Verdoorn
Verdoorn Beton B.V., Gouda, The Netherlands
J.J.M. Van der Vring
C.R.O.W, Ede, The Netherlands

Summary

When concrete blocks are put together very tight with very little or no space in the joints, problems can arise. When these blocks rotate against each other while under load, they press their top-arrises against each other which can result in damage. Although the blocks are strong enough to carry the traffic laods, the concrete breaks or crumbles along the brim and scaling occurs. Espescially in the case when blocks are machine-layed the risk of scaling is rather high. To create more room between adjoining blocks spacer nibs were introduced in all kinds of pattern. This solution failed because of the very concentrated forces that were introduced in the upper part of the nibs and the arrises that were touched by these nibs. The solution was found in recessed profiles in the upper perimeter of the block. Several generations of profiles were developed till the optimal form was found.

The production and use of concrete paving blocks in The Netherlands saw its great increase after Worldwar II, about half a century ago.

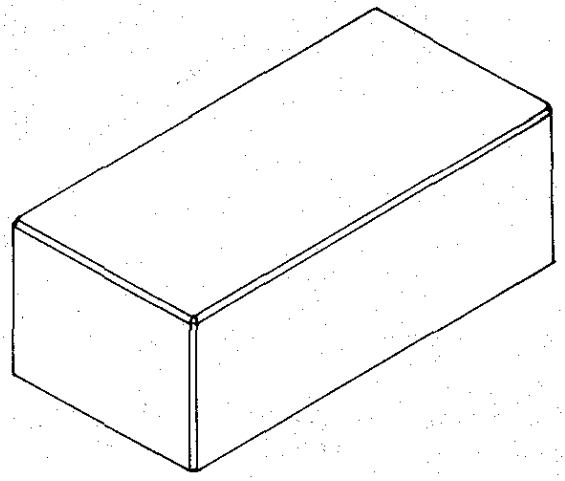

Figure 1. Ordinary concrete block

Almost right from the beginning they were fitted with chamfers to make the square edges on the top less vulnerable to damage by mechanical impact. Another slight advantage of the chamfer was that after laying, differences in height between two blocks became less abrupt. To fill the joints between the blocks in The Netherlands crushersand is used traditionally. The filling of these joints was eased very much by this shape of the edges.

After some time for empirical reasons their dimensions were fixed on 5 x 5 mm. For flags it became also 5 x 5 mm but for flags used in cycle-paths it was diminished to 2 x 2 mm, providing the most comfortable ride for that particular type of vehicle.

The Netherlands has a very old tradition in paving blocks, using traditional clay pavers for centuries as can be seen on old paintings of Dutch masters. After World War II clay pavers were hard to get and concrete blocks were produced as an alternative. They were produced in the same sizes as clay pavers and they had the same deviations in dimensions.
These deviations were caused by irregularities in moisture content that sometimes resulted in concavity of the sides. Also the moulds were produced with relative less precision and this caused also deviations in size of the product. Differences in height occurred by differences in the amount of material that was put in the moulds and differences in compaction.
Like with clay pavers it was necessary to lay each block by hand to compensate the differences in size by this individual treatment. This counted for height as well for length and width.

In the first place the requirements for quality of the complete pavement were focussed on flatness of the paved surface. This meant that the upperfaces of the blocks should be in one plane and that the surface on itself was flat or slightly rounded without irregularities.
Besides that, the lines formed by the joints between the blocks should be straight. It will be clear that due to the deviations the joints between the blocks always had a certain width to fulfill this demand.
Another requirement was that the blocks should be locked up properly by the sandfill in the space between the blocks, merely caused by the deviations in size.

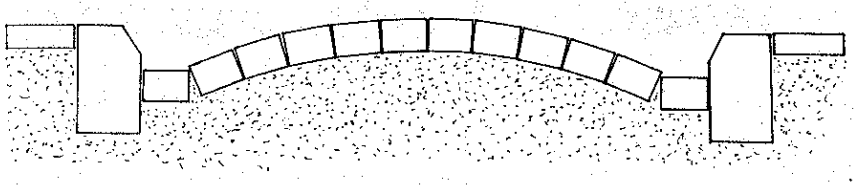

Figure 2. Example of a slight rounding of the roadsurface

Most of the pavements had a slight rounding as you can see in the drawing in figure 2. This slight rounding caused that the width of the joints on the surface was wider than in the plane of the bottomfaces. This in combination with the joint space for compensating the irregularities always provided enough room between the blocks, so that the edges seldom touched each other.

Some 25 years ago this situation started to change.
Planes to be paved became larger. This was for instance the case for parkinglots, stocking of containers in harbor area's and wider streets. For these places the rounding of the surface was not longer possible.
Also the loads passing the streets increased in weight and number and the infrastucture under the

pavements became more dense. This gave birth to puddles and rutting.
Beside that the control of the dimensions of concrete blocks became more precise while the moisture content limits were narrowed and the tolerances on the size of the moulds were smaller. This resulted in a more constant size of the blocks and this made a smaller joint possible.
Other techniques of applying the pavements became apparent and manually or mechanically laying were introduced more frequently. Through these techniques the blocks were placed shoulder to shoulder with very little space between them.

All these factors caused that the space between the blocks became smaller. The number of blocks touching at the edges increased and it was more difficult to get the sandfill in the joints, which in any case became smaller.

All of a sudden the first complaints about spalling on the edges of the concrete block pavements appeared. So a better product, with new modern application techniques resulted in a worse final product, the pavement.
This puzzled everybody.

In the Netherlands the blocks are produced and delivered under a guarantee system and the KIWA as a third party is responsible for the validity of the KOMO marking of the products.
Investigations showed that, although the products met the specifications, the design and the contract were sound and the contractor had done his job properly, these failures still were possible. So given the circumstances nobody could be blamed for this.
KIWA contacted the association of concrete block producers FABES for deliberations to solve the problems.

It was established that streets with this slight roundness and new blocks gave no problems. In case the upperedges of the blocks were pressed together while rotating under the pressure of a passing load the tension in the concrete became to heavy and the edges crumbled. This has become possible by the narrowing or even disappearing of the space between the blocks.

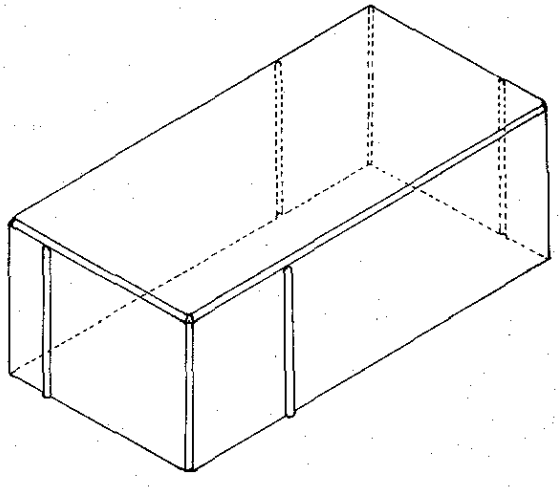

Figure 3. Concrete block with protruding spacer nibs

The solution was sought in fixing the space between the blocks by spacer nibs like shown in figure 3. Although this solution seemed to be very obvious, in practice it had several disadvantages.
First of all the spacer nibs were rather narrow and during production, depending on the kind of mix, it was possible that in the mould the room for the spacernib got filled with material permanently, not developping a nib on the block any more. The compaction of the concrete in the room for the spaver nib is difficult.
Another disadvantage was the fact that the nibs were designed over the total height of the block. When a block, touching its neighbouring block with this spacer nib, rotates, the tension is concentrated on the top of the spacer nib and a failure is programmed unvolentary on that particular spot. The concrete will crumble for sure, leaving a hole.

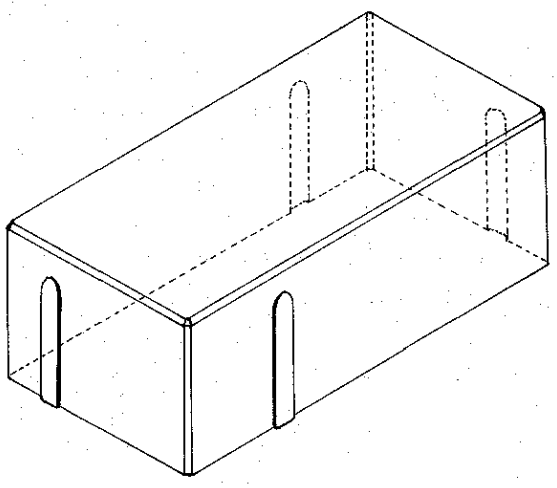

Figure 4. Example of concrete block with modified spacer nibs

So improvement was looked for in a wider spacer nib, not reaching to the top of the block, like shown in figure 4.
This proved to be a better solution in practice but still during production this type of spacer nib is depending on the right concrete mix and is vulnerable for damage during transport or reuse.

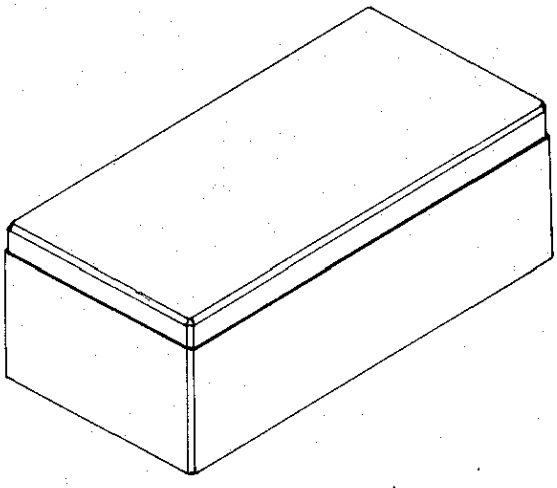

Figure 5. Example of concrete block with recessed brim

Spalling always occurs at the upper edges of the upperface of the block, so a very logical thought was to recess these edges some millimeters, in order to make a little degree of rotation possible without - the upper edges of the blocks touching each other. The principle is shown in figure 5 and in practice this system performed rather well. The producers however were not completely satisfied while during production the stamper of the press sometimes got stuck in the mould.

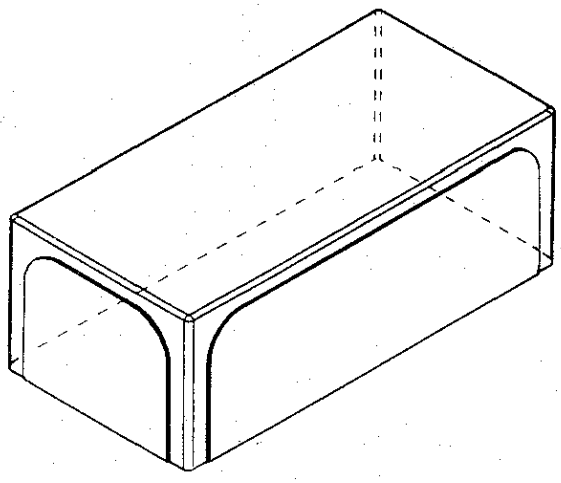

Figure 6. Example of concrete block with recession on the brim and vertical edges

The solution for that problem was to have this recessed edges also on the vertical sides of the block with a rounding were the two edges meet and to shape them like is shown in the drawing in figure 6. It has also the advantage that the vertical edges are less vulnerable to damage and the sandfill on the crossings between the blocks will reach to the bottom, thus providing a perfect support between the blocks.
After testing in practice, this type of block was introduced already 10 years ago on a regular scale. No complaints have reached the producers ever since and these blocks perform very satisfactory.

So, was everybody happy ? No, the paviors weren't.

Although in The Netherlands many blocks are layed mechanically, most of them are still put in place by hand. Picking up a block, having this recessed edges at the top between the thumb and the other fingers is not comfortable and becomes a difficulty after many hundreds of blocks passing the hands of the pavior during a one day production of laying.

The solution to this problem was a further development of the already recessed rim, right in the middle of the longer sides of the block, like shown in figure 7. The thumb now slides easy in the narrowed middle of the block, thus giving the pavior a firm grip.
Today, everybody is satisfied with this product. It is produced by most of the manufacturers according to uniform specifications and used all over the country. This block can also be layed mechanically without any problem.

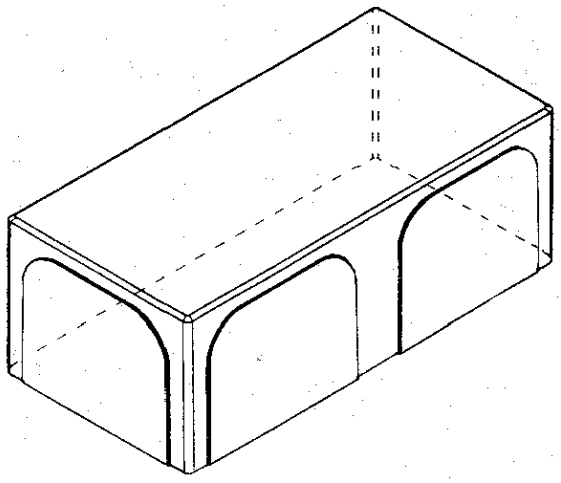

Figure 7. Latest development of concrete block with recessed sides

A very important question is what the costs of these specially shaped blocks are in comparison with ordinary blocks without the spacing provisions.
In general these provisions have a cost increasing effect on the blocks; the two first solutions less than the other three.
Manufacturing of the moulds is done by using iron straps that are welded together. These straps have deviations in thickness and when the mould is manufactured, the final dimensions are reached by grinding the moulds into shape within very little tolerances. So, grinding is always necessary, also when no special features are wanted. Asking for the special shape as was shown in the slides does not increase the costs significantly.
Besides that, producing large quantities of blocks with these recessed sides results in less concrete per unit and this has a decreasing effect on the price of manufacturing a block.

Developing and introducing the new solutions was done in close coöperation with the purchasers. In three selected area's, equally divided over the country, the new blocks were introduced under the coördination of the branche organisation FABES and in coöperation with KIWA. The purchasers as customers, using the new breed of products, were interviewed about the advantages and the disadvantages. In only two reactions disadvantages were recorded.
The unwelcome possibility of weeds growing in the joints was mentioned and also the need for more (expensive) crushersand, used to fill the joints between the blocks was regarded less favourable.
These disadvantages were decided to be of minor importance against prevention of spalling and the constructural advantages in the pavement.
Besides the fifth and last solution the second is still in use but not extensively.

The conclusion about the present shape of the blocks is that they provide excellent protection against spalling under loading, are accepted by the handlaying paviors and delivered at the same price as rectangular blocks without any features.