THE BEHAVIOUR OF CONCRETE BLOCK PAVEMENTS UNDER HEAVY TRAFFIC CONDITIONS IN BELGIUM

L. Hendrikx, A. Jasienski
Federation of the Belgian Cement Industry
Brussels, Belgium

L. Heleven
Flemish Road Infrastructure and Traffic Administration
Brussels, Belgium

SUMMARY

The production of concrete paving blocks in Belgium has increased from about 1 million m^2 in 1985 to nearly 10 million m^2 in 1995. They are used as well on light as on heavy trafficked roads, and also on industrial and port areas. Because they provide for aesthetic and functional advantages, paving blocks are now even chosen on main roads in built-up areas (through roads in small towns), where traffic ranges from 3.000 till 20.000 vehicles per day with a permitted speed of 50 km/h, and sometimes up to 70 km/h. Although the behaviour of concrete blocks under heavy loads is often rather good, in some cases failures, such as rutting and dislocations have been observed after a few years.

Therefore, an investigation and survey programme has set up throughout the country to analyze the observed distresses.

In connection with this investigation, the influence of several factors such as traffic, block type, bedding materials, joint-filling, drainage and base type on the behaviour of a block pavement have been discussed.

1. Introduction

In the period of 1970 to 1985 the investments in public roads in Belgium largely went to the expansion of a substantial motorway network, for which to a large extent, up to 40 %, pavements were constructed in continuously reinforced concrete. As these works are practically completed, more and more efforts are being done to renovate the existing road network and to make improve its safety. Much attention is being paid to the rearrangement of main roads in built-up areas, the so called "Through roads in Built up Areas".

Not only safety but also general aspect play an important role in these renovations. The consequence is that concrete paving blocks have been laid on heavily trafficked regional roads (former national roads), especially during the last five years. Paving blocks, that from 1985 onwards are growing enormously, namely an increase of the annual production from 1 million m^2 in 1985 to almost 10 millions m^2 in 1995, are available in numerous shapes and colours. Therefore they are not only used for their aesthetic characteristics, but also for their typical functional advantages, especially in built-up areas [1].

Since about a decade, blocks are, after the example of the Netherlands, very popular and successful on heavily trafficked harbour areas. Here they usually use 120 mm thick rectangular blocks, placed on a 300-350 mm thick cement bound basecourse [2].

Probably due to these successful applications, blocks were also utilized for the rearrangement of "through roads", usually 100 mm and sometimes 120 m thick.

Many municipalities do not have ring-ways or deviations, hence often traffic still goes through town centres. A traffic density of more than 5.000 vehicles per day in one direction and truck percentages up to 10 or 20 % almost are a general rule. More, axle loads of 13 tons are allowed in Belgium.

The design of block-pavements on this kind of roads is based on experience. Mostly the same structure is chosen as for flexible asphalt pavements, where the asphalt layer is replaced by blocks, 100 or 120 mm thick, and a laying course of 30 to 50 mm.

Many of these block-pavements show already after 3 to 5 years after construction important symptoms of damage, like rutting, displacement and coming-out; hence an investigation into the origin of the problems seems necessary, all the more because in the near future many more traffic crossings and rearranging works are listed on the Belgian road program.

In this paper the behaviour of concrete blocks on heavily trafficked roads in built-up areas is emphasized. Based on an inquiry a few recommendations are suggested about the application of blocks under heavy traffic.

First we describe the main characteristics of paving blocks (which have to meet the requirements of the Belgian standard NBN B 21-311), and further followed by the materials mainly utilized for the construction.

2. Characteristics of Blocks: NBN B21-311

Blocks exist in a large variety of shapes and colours. It is remarkable that during the last few years the number of kinds of blocks, especially those with decorative characteristics, have enormously increased. The use of coloured blocks with facing layer still increases. The latest version of the NBN B21-311 (1992) includes adapted requirements so that all these decorative blocks can also be delivered with BENOR-label.

2.1. Types of blocks

In the NBN B21-311 blocks are divided into 3 classes, namely:

- type A: rectangular (standard dimensions of 220 mm x 110 mm)
- type B: interlocking blocks
- type C: special blocks which do not belong to the former categories. They mostly are elements with decorative shapes and colours.

The standard thicknesses are: 60, 70, 80, 100, 120 and 130 mm.

2.2. Facing layer

Regarding the coloured blocks with a facing layer, the standard NBN B21-311 states that this layer may nowhere be thinner than 40 mm. This facing layer is mostly built up of relatively expensive, naturally coloured granulates in order to obtain colourfast blocks: for example white stones are frequently used for carrying out durable road markings and pedestrian road crossings.

2.3. Dimensional characteristics

In the latest edition of NBN B21-311 the allowed tolerances of the real block dimensions compared to the nominal production dimensions, as assumed by the producer, are the following:

- length (L) and width (b): ± 2 mm
- thickness (h): ± 3 mm

These tolerances are considerably smaller than before and are independent of the nominal value.

As the "lay down-technique" has practically found general acceptance, these stricter demands are absolutely necessary.

2.4. Side faces

The side faces may be equipped with spacer nibs (nibs max. 6 mm thick and min. 10 mm wide). They are not frequently applied.

The side faces may also be provided with chased side faces (max. 3 mm deep) (fig. 1).

With these blocks, high contact pressure at the upper edges is avoided and the risk of shattering is much smaller, in particular if the blocks are "laid down".

Often rather narrow joints are wanted on heavily trafficked pavements and under relatively dense traffic (in order to reduce noise problems); therefore blocks with chased side faces offer important advantages. As a matter of fact such blocks have been successfully used on harbour areas for many years and are now accepted for the renovation of heavily trafficked roads, at bus stops, etc.

Fig. 1

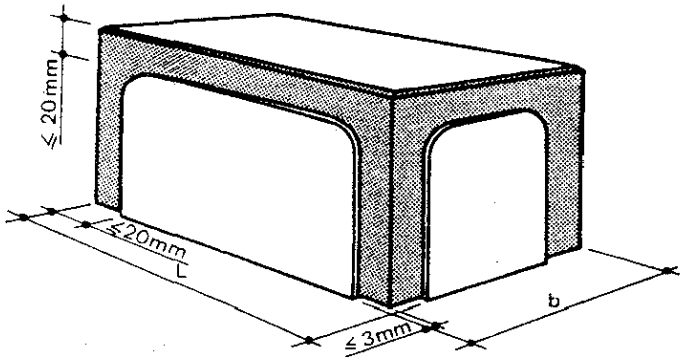

2.5. Chamfers

The revised standard states that the horizontal and vertical projections of the chamfers are at least 3 mm and at most 7 mm wide. Chamfers which projection is smaller than 2 mm are also accepted, but they are not considered as chamfers. Those blocks are among other things appropriate for bicycle tracks and for noiseless pavements on main roads and roads with relatively fast traffic.

2.6. Mechanical and physical characteristics

As on European level in the line of the CEN-activities it was suggested to replace the compressive strength by the splitting strength, the latest version of NBN B21-311 (1992) also introduced the splitting strength. The required splitting strengths are given in table 1 for blocks at least 80 mm thick. The table also includes the specifications concerning water absorption. When they are met, the blocks will normally be resistant to frost and thawing salts. In cases of doubt, with special blocks and when blocks are used on main roads intensely salted during the winter period, some administrations find it desirable to put complementary specifications in order to improve the durability of the blocks. Mostly the draft standard ISO DIS 4846.2 is applied, which states that products that are at least 28 days old may lose no more than 5 g/dm^2 of mass after 30 cycles of thawing and freezing.

When blocks are applied on main roads, they surely must be wear-resistant. In the NBN B21-311 the requirements for blocks of a thickness of min. 80 mm are stricter than for thinner stones (often decorative stones). The test is done according to NBN B15-225 (1990). The abrasion, after an abrasion distance of 3.000 m may not be more than 2,5 mm individually and 2 mm on average. The kind of abrasion sand can influence the results considerably and therefore requires standard specifications.

TABLE 1 - *Mechanical and physical characteristics*

Properties	Individual value	Average value
Splitting strength	min. 3,5 MPa	min. 4,5 MPa
Water absorption (mass %)	max. 5,5 %	max. 5,0 %

3. Characteristics of the Structure of Heavily Trafficked Block-Pavements

Pavements with heavy traffic are usually constructed as follows:

- blocks (100 or 120 mm thick)
- laying course (30-50 mm)
- base course (200-250 mm)
- if necessary sub-base

3.1. Subgrade and sub-bases

Since the bearing capacity of the subgrade is important for the behaviour of pavements, in case of bad soils the upper 15 cm of the soil is often replaced by a draining frost resistant subgrade.

It is usually enforced in the specifications that the bearing capacity of the subgrade, measured with the plate of 200 cm^2 has to give a compression modulus of at least 17 MPa, which corresponds with a CBR-ratio of approximatively 15 %. For sub-bases, a compression modulus of 35 MPa is required. For sand sub-bases the modulus of elasticity is assumed to be 200-300 MPa.

3.2. Base course

Mostly cement bound bases are used in Belgium for heavily loaded block-pavements, such as lean concrete, cement bound crushed stone and sometimes sand cement, e.g. for speed ramps. Seldom unbound materials with continuous or discontinuous gradings are applied, mostly in built-up areas with cables or pipes. When the specifications regarding density and cleanness are met, it is allowed to use recycled crushed material in the base-course.

Table 2 shows a list of some useful characteristics for the design of block-pavements. The specifications mostly only concern the characteristics of the materials and their compressive strength. Not much has yet been prescribed regarding permeability and drainage .

TABLE 2 - *Characteristics of several base-course materials*

Material	Compressive strength (MPa)	Modulus of elasticity (MPa)	Poisson's Ratio
Lean concrete	≥ 10 (90 days)	15000-25000	0,15-0,20
Sand cement	≥ 4 (28 days)	5000-8000	0,20
Crushed material improved with cement	-	10000-15000	0,20-0,5
Crushed material	-	200-500	0,3-0,5

The literature gives diverging values for both the modulus of elasticity and Poisson's ratio. Base course materials can differ considerably in different countries and regions. This is understandable, yet further research seems desirable.

3.3. Laying course

Mixtures have of about 40 % crushed sand 0/2 and 60 % fine crushed material 2/7 have been applied, during the last few years, on pavements with a relatively heavy traffic, such as traffic crossings in built-up areas because of successful applications on harbour grounds. The thickness of the laying course is min. 30 and max. 50 mm. For this improved bedding sand the proportion of fine elements (<80 μm) has to be smaller than 5 %. In recent general specifications a maximum of 3 % is allowed.

In order to achieve a greater stability of the laying course often sand cement is also used on main roads, e.g. for the construction of speed ramps and bus stops. The compressive strength on standard proctor samples has to be at least 2 MPa after 7 days.

4. Aspects of Execution

4.1. Preliminary works

The unevenness of the base course measured with a straightedge of 3 m may not exceed 10 mm. The base course has to be graded under the same profile as the pavement. Crossfall is usually 2,5 %.

Holes are usually bored in cementbound foundations on harbour grounds. They are filled with draining material to avoid water stagnation in the laying course.

4.2. Placement

Except on harbour grounds, the blocks are almost always laid by hand: "LAY-DOWN". The width of the joints may not exceed 2 mm.

Usually rectangular blocks are laid in herringbone patterns on heavily trafficked pavements. Elbow pattern also appears regularly, amongst others at bus stops.

Fixing of stones needs to be done with vibrating plates, equipped with a rubber or synthetic sole. Filling of the joints is often achieved for heavily trafficked pavements with a tyre roadroller of at least 10 tons.

Unevennesses of more than 5 mm, measured with a straightedge of 3 m, are not accepted for main roads. Differences in height between the paving blocks may normally not exceed 2 mm.

4.3. Materials for joint filling

Usually fine dry sand 0/1 with 5 to 20 % fine material passing 0,80 mm is used for joint filling. As a high percentage of fine elements prevents good filling, especially in humid weather, recent specifications limit the content of materials < 0,080 mm to 10 %. Recently more and more crushed sand, a material that sticks better, is being used for fast traffic.

5. Behaviour of Blocks on Heavily Trafficked Main Roads

5.1. New developments for concrete blocks

Since a few years concrete blocks have not only been used for the rearrangement of streets and squares, bus stops, bicycle tracks and footpaths, but also roads got a complete block-pavement.

One of the main objectives was to aware the drivers that they were in built-up areas where speed needs to be reduced. This was mostly accompanied with a constriction of the traffic lanes and sometimes with the construction of elevations. Guidelines were published in 1990 in the Flemish Region about lane widths and bicycle tracks. A nominal width of 3,00 m is enough for roads where the allowed speed is not higher than 60 km/h . By lack of space, kerbs or gutters with limited depth and width may be included in the nominal width. In some cases the true lane width is therefore only approximatively 2,75 m.

Such applications have sometimes led to damages, such as loosening, displacements and ruts. As many roads with crossing traffic are planned for the next years, it became necessary to investigate the possible causes of the stated damages. Hence a survey of the

behaviour of blocks on regional roads has been set up throughout the country (Flemish and Walloon regions).

5.2. General survey of 1995

During the second half of 1995 the Road Administration of the Ministry of the Flemish Community started a survey wherein different project leaders were questioned about traffic, construction period of the pavement, construction itself, laying course, type of - blocks, stated damage and noise problems. A same survey happened in the Walloon region.

A summary of the results is given in table 3 and 4 at the end of this paper.

5.3. Influence of different factors on the behaviour of blocks

5.3.1. Traffic The traffic intensity on the involved roads can sometimes be qualified as very high, namely 5.000 - 20.000 vehicles per day. Speed limit mostly is 50 km/h, although often people do drive faster.

Almost all pavements labelled as bad have to cope with more than 8.000 vehicles per day, with 10 - 20 % trucks. Yet a series of pavements that behaves well, despite the heavy traffic.

5.3.2. Base Course Problems occur both with unbound and with cement bound bases. Permeability, yet insufficiently known, and draining capacity certainly require additional investigation. Hence, experimentation with draining concrete or other bound materials is desirable.

To what an extent a greater thickness of the base or application of special bases could improve the behaviour also requires further investigation.

5.3.3. Laying Course In Belgium traditionally sand cement is used to a large extent as laying course on heavily trafficked pavements. However, mixtures of crushed sand and fine crushed material 2/7 are more and more used. Although for both solutions, problems are occurring.

Closer investigation of a few problem cases, showed that sand cement of relatively fine sand pulverized near the traffic lanes, especially when the pavement was rather soon submitted to heavy traffic.

Mixtures of crushed sand and 2/7 with high contents (10 - 18%) of fines gave cause, especially during the very humid spring of 1995, to severe damages (displacement and ruts). A possible reason is that the thickness of the laying course, especially in rearrangement works where the old foundation usually was preserved, varied strongly and often exceeded 50 mm, causing post compaction.

It is remarkable that the use of sand cement as laying course for speed ramps or elevations caused very few problems. The fast drainage due to relatively great crossfalls

may explain this good behaviour.

Sand cement is spread in thicknesses of 20-30 cm or even more and then compacted. Before laying down and vibrating the blocks, 10-20 mm are loosened. Tolerances in the thicknesses of the blocks need to be strictly limited.

5.3.4. Blocks On Flemish district roads, the format 220 x 110 x 100 mm was applied almost everywhere and in the Walloon Region, interlocking blocks were often used. Realizations with blocks of 120 mm do not generally seem to behave significantly better than those of 100 mm. Before the revision of NBN B21-311 (1992) rather high tolerances were allowed (3-6 mm) for the dimensions; this has in some cases increased the damage, in particular because of great variations in joint widths. Damage of blocks themselves was generally very limited, unless in the case of important distresses where they were anyway damaged (breaks).

5.3.5 Laying Pattern Different laying patterns, yet mainly chevron and herringbone patterns were used. It is known that problems are more likely to occur with stretcher patterns than with other patterns. In order to reduce the rolling noise, the herringbone pattern (at 45° to the axis of the road) is preferred. Also small chamfers or blocks without chamfers ($\leq$ 2 mm) contribute to the reduction of rolling noise.

5.3.6. Joint Filling Filling of the joints was almost done with very fine sand (0/1), that often was sucked out of the joints by relatively fast traffic short after the opening to traffic. Water could then easily penetrate into the laying course, that then often deformed by lack of stability, which of course resulted in deformation of the pavement.

5.3.7. Opening to Traffic An early use by heavy traffic (sometimes after a couple of days) seems to have caused problems, especially when sand cement was used as laying course. Badly filled joints made the problem even worse.

5.3.8. Lane Width Relatively narrow lanes of 2,75 to 3 m, which are often applied at the rearrangement of roads with crossing traffic in order to reduce speed, create truly canalized traffic. Combined with breaking forces at crossings this was one of the main causes of severe damages, namely ruts. On the same road no deformation was observed where the lane width locally exceeded 3 m.

5.3.9. Edge Restraints When strictly following the dimensions of the drawings when placing edge restraints and when ignoring the tolerances of the blocks, sometimes larger joints were executed exactly at the edges in order to avoid sawing and cutting. Obviously this does not insure the stability of the blocks.

As blocks at the rearrangement of through roads have to link with asphalt and sometimes with concrete slabs, these places demand extra care. Problems can be avoided by applying precast elements, e.g. 150/300, between the asphalt and the blocks. Often some rows of blocks are laid in stretcher bond on lean concrete; however, this solution has caused slight noise problems at some places.

6. Conclusions - Recommendations

* It is difficult to draw clear conclusions, from the survey, for damaged cases that were pointed out on highly trafficked regional roads during the last few years.

* Several factors play a role and more thorough investigations of certain cases, where the pavement behaves well despite heavy traffic, should be undertaken.

* Anyway, as could be expected, traffic seems to have a great influence. At more than 5.000 vehicles per day both the conception and the execution need to receive extra attention and care.

* Whatever the chosen base course, good drainage is always necessary. The influence of the base and its thickness require more research.

* The materials of the laying course, both bound and unbound, need to be coarse (min. 0/4) and clean $\leq$ 3 % fines ($\leq$ 0,080 mm).

* Rectangular paving blocks of 100 mm will normally be sufficient.

* Tolerances for heavy traffic blocks should not be more than 2 mm (max. 3 mm for the thickness). Although interlocking blocks are less popular in Belgium because of occurring problems, one should check if they could not provide for a more stable position of paving blocks.

* Although the inquiry into laying patterns did not show remarkable differences, the herringbone pattern is to be preferred, principally
because of the reduced rolling noise.

* More attention should be given to the filling of the joints. Even after execution, often additional filling is necessary. Fine crushed sand seems to improve stability.

* Under intense canalized traffic the risk for problems is probably the highest. A rather watertight pavement (treatment with, amongst others, silicones) and a very stable construction, with good drainage (min. 2,5 % crossfall), are absolute requirements.

References

1. HENDRIKX L.
"*New developments in the field of concrete paving blocks in Belgium*" in "Concrete Block Paving" - Proceedings of the Second International Workshop, Oslo, June 1994
pp. 478-483

2. HENDRIKX L.
"*Concrete pavements for port areas in Belgium - Experience and innovations*"
in "Concrete Pavement-Design and Rehabilitation" - Proceedings of the Fifth International Conference, Purdue University, West Lafayette, Indiana USA, April 1993
Volume 1, pp. 61-67

TABLE 3 - *Survey in Flemish Region - Behaviour under heavy traffic*

Road N	Town	Kmpt	Traffic (veh/day)	Trucks (%)	Base	Bedding layer	Pattern	Constr. Year	Behavi-our	Remarks
001	Brasschaat	51.3-53.2	20000	9	25cm granular base	3 cm sand-cement	herringbone**	1992	good	
010		19.5-19.9	12500	10	25 cm granular base	5 cm crushed sand	herringbone*	1992	bad	rutting, deformation and noise
013		7.0-8.5	9000	20	25 cm lean concrete	5 cm sand	herringbone*	1986	good	
111	Stabroek		10000	9	20cm lean concrete	3cm gravel	herringbone*	1992	bad	settling
115	Brecht	17.6-19.3	10000	9	17 cm granular base	8 cm bound sand	herringbone*	1990	good	
076	Meeuwen	36.8-37.4	10000	15	25 cm granular base	5 cm sand-cement	herringbone*	1994	good	
618	Sluizen	3.2-4.3	3000	10	20 cm cem. bound	3 cm sand-cement	herringbone*	1990	good	
719	Helchteren		8500	12	30 cm old gran. base	5 cm sand	herringbone*	1992	bad	rutting
759		3.5-5.1	4000	11	20 cm granular base	3 cm sand-cement	herringbone*	1989	good	
777	Wellen	6.1-6.2	3000	6	20 cm cem. bound	3 cm sand-cement	herringbone*	1991	good	
002	Kessel-lo	28.0-28.6	15000	12	20 cm lean concrete	5 cm crushed sand + cement	herringbone*	1991	medium	rutting and setting
009	Asse	11.5-13.0	18000	30	20 cm lean concrete	5 cm sand+2/7+cement	herringbone*	1992	bad	rutting, settings and noise
010		37.4-38.9	10000	16	20 cm lean concrete	5 cm crushed sand + 2/7	herringbone *	1989	medium	rutting
272	Galmaarden	13.9-14.3	4300	11	20 cm lean concrete	4 cm crushed sand + 2/7 + cem	herringbone**	1993	good	
008	Zwevegem	80.8-80.9	8500	15	20 cm lean concrete	3 cm stabilised sand	stretcher	1994	bad	settings

* Heringbone bond with "Bishops Hat" edge blocks
** Heringbone bond with "Cut" edge blocks
*** Interlocking blocks, mostly I-profile

TABLE 4 - *Survey in Walloon Region - Behaviour under heavy traffic - Damaged sites*

Road N	Town	Kmpt	Traffic (veh/day)	Trucks (%)	Base	Bedding layer	Pattern	Constr. Year	Behaviour	Remarks
N569	Charleroi	5.0-5.3	14000	25	25 cm lean concrete	5 cm sand-cement	stretcher	1991	medium	local rutting
N975	Gerpinnes	7.1-8.0	10000	20	20 cm lean concrete	5 cm sand-cement	stretcher***	1991	medium	local distresses
N053	Strée	19.0-20.0	6500	2	20 cm granular base	10 cm sand-cement	stretcher***	1991	bad	rutting and cracked blocks
N059	Lobbes	13.3-14.0	13300	14	25 cm lean concrete	10 cm sand-cement	stretcher***	1992	medium	local scaling
N027	Manage	26.3-26.5	15000	15	20 cm granular base	2-6 cm 0/4	stretcher***	1992	bad	deformation, rutting and joints
N535	La Louvière	2.0-2.3	buslane	100	20 cm porous lean c.	4 cm 0/7	stretcher***	1992	bad	rutting and open joints
N527	Ath	0.2-0.9	12000	10	20 cm granular base	4 cm sand-cement	stretcher***	1991	bad	rutting and deformation
N271	Rixensart	0.6-1.2	7000	3	20 cm lean concrete	3 cm sand-cement	stretcher	1994	medium	broken blocks and deformation

* Heringbone bond with "Bishops Hat" edge blocks
** Heringbone bond with "Cut" edge blocks
*** Interlocking blocks, mostly I-profile