THE DEVELOPMENT OF THE ABRASION TEST FOR CONCRETE PAVING

A.J. Dowson
Marshalls Building Products, Halifax, UK

Summary

This paper explains how the Capon Test, originally designed to evaluate the abrasion of ceramic tiles, was developed by joint work between countries in the European Union.

The Wide Wheel test has been used in France as a method of evaluation for many years and subjected to further examination to reduce variation and errors when testing concrete.

The test is quite simple and quick to carry out and now forms one of the voluntary test methods in the European Harmonised Standard.

Introduction

In 1992 application was made to the European Community for funding, for the Development of a testing method for abrasive wearing strength of Precast Concrete Paving Blocks. This project was led by Michael Wallis Vallés of CERIB in France and the other parties were from the UK, Spain, Germany, Belgium and the Netherlands.

The description of the proposition was:-

One of the requirements for these products is that they resist abrasion, this being one of the fundamential criteria for conservation of their integrity over a long period of time. For measurement of abrasion resistance we adopted the friction test using a 70mm wide wheel, as stipulated in the French Standard NFP 98303.

However, preliminary investigation conducted in several countries revealed that although the terms of the procedure under NF P 98303 were sufficient for the French, the method has to be further developed and better described if it is to become a standardised European Method.

The programme developed was:-

September 93	Survey and obtain the specification for the different types of corborundum available throughout Europe.
January 94	Research into the influence of the different abrasives.
September 94	Inter Laboratory comparisons of the specimen after standardisation of machines and abrasive.
December 94	Collection and statistical analysis of the results.
May 95	Presentation of final draft.

Test Development

In order to calibrate the wearing machine, it is necessary to use a reference sample and it must be representative of the wearing on concrete products and taken from a stone with constant characteristics that is readily available.

The selection was made, after comparing specified glass and various natural material, of the marble of Boulonnais.

The justification was that, when tested under initial condition, the groove was approximately 20.5 mm, the marble has a reserves of 500 000 m^3. The test information is consistant and has been used for over 100 years.

To ensure consistency, the abrasion wheel hardness is the Brunell Hardness 203HB and 245HB, the width of the wheel is between 69 and 71mm, its diameter is between 201mm and 199mm. The speed of rotation is 75 revolution per 60 second ± 3 second and the abrasive flow is constant.

The assessment of abrasive from the different sources was evaluated for its granulometrey, physical and mechanical characteristics. It was found that for precision only white fused alumina complying with the criteria FEPA 42F: 1984 should be used.

By varying the amount of grit from less than 1 litre to upto 3 litres per minute there was a discrepancy and again for consistency 3 litres per minute was chosen.

Each machine used in the evaluation was calibrated by the same method and a set procedure adopted. The flow was verified by collecting the grit which passed though both the constant level hopper and the storage hopper. Each machine was checked against a standard list of questions.

Principle of the test

The test is carried out by abrading the upper surface of a unit with an abrasive material under standard conditions.

The diagram 1 shows a schematic section through the machine.

The abrasive is allowed to fall from the lower funnel at a pre-determined rate between the specimen, which is completely held under constant load, and the rotating wheel.

After the prescribed number of revolutions the specimen is removed and the abraded area is measured.

Calibration of the machine

Using Boulannais Marble of quality lunel demiclair, two faces are ground with a diamond grit size 100/120, rugotest 103 Class N7 in accordance with standard ISO/DIS/2632.

The justification of this was that samples of this marble which were obtained were highly polished, which resulted, after testing a groove only 14mm instead of 20mm.

The machine is calibrated against the reference sample of Marble using the test method described.The counter weight is adjusted, when required, after 75 revolution of the wheel, the groove length produced in 20mm ± 0.5mm.

Sample preparation

To enable easier measurement of the groove, the specimen of dimensions at least 100 x 70mm, is cut from the main body of a unit. It shall be clean and dryand is painted with a dye or a marker pen. The specimen shall be lightly ground to produce a smooth flat surface within tolerance specified.

Procedure

The hopper is filled with dry abrasive material, the specimen is located on the trolley so that the groove produced will be at least 15mm from any edge. The trolly is released so that the specimen is in contact with the wheel, simultaneously the abrasive is allowed to flow and the machine is switched on to set the wheel in motion.

After the required number of revolutions, the flow of the abrasive grit and the wheel is stopped and the trolley is moved back to the locked position. The specimen is removed ready for measuring the groove.

Measurement of the groove

For ease of measuring the specimen is placed under a magnifying glass preferably fitted with illumination facilities. Lines are drawn at the extremities of the groove and marked as shown in diagram 2. Using an appropriate measuring device the widths are measured, at the three locations as shown, to 0,1 mm but the average result is reported to the nearest 0.5mm.

Evaluation of the result

As we were investigating each stage, changes were made to the apparatus to minimise variation between laboratories. The result of all this co-operative work is a test method for Determining the Abrasion Resistance by a laboratory method being produced as a European Test Method.

A typical set of results from the participating laboratories is shown in figure 1. from the second round of tests following minor changes in test proceedure

Smooth Surface

Laboratory	1	2	3	4	5	6	7
Calibration of marble	20	20	20		20	20	20,5
	20,5	20	22		18	20,5	22
	20,5	20	22		18	21	22,5
	21	20	22,5		18	21	22,5
	21	20	22,5		18	22	22
	21	20	22,5		18,5	21	22,5
	21,5	20	22,5		18,5	21	22
	21	20	22,5		18,5	20,5	21,5
	21,5	20	22,5		18	21	22,5
	20,5	21	23		18	21	22
	20,5	20	22,5		18,5	20,5	22,5
	21	20	23		18,5	21	21,5
	21	20	23		18,5	21	21,5
	21,5	20	22,5		18	21,5	21,5
	21,5	20	23		17,5	21,5	21

Rough Samples (lightly ground)

Laboratory	1	2	3	4	5	6	7
Calibration marble	20	20	20		20	20	20,5
	16	16	15,5		14	17	16
	15,5	16	15,5		14,5	17	16
	16	14	15,5		14,5	15,5	15,5
	16	14	16		14,5	16	16,5
	16	16	15,5		14	15,5	16,5
	16	16	16		14	16	16
	16	15	16		12,5	16,5	16
	15,5	15	16		12,5	16,5	16
	15,5	16	16		13	17	16
	16	16	15,5		13,5	17	16,5
	15,5	15	15,5			17	16,5
	15,5	14	16			16,5	16,5
	15,5	14	16			16,5	16,5
	16	15	16			17,5	16,5
	16	15	16			17	16
	15,5	15	16			16,5	16,5
	16	15	16			16	16,5

The result of abrasion should be parallel lines but on occasion the result is converging lines. This lead us to believe the apparatus was not correctly adjusted. Further investigations on other materials namely, natural stone and clay pavers produced similar results. The abraded

my suggestion they can sometimes affect the abrasion groove.

The photograph 3 illustrates this problem.



Further Evaluation

As part of a further investigation, a comparison was made between the narrow wheel 10mm and the wide wheel 70mm to see if there was a correlation.

This test comparison indicated and highlighted the problem of abrading the matrix and the aggregate used. In some cases, the 10mm wide wheel missed the coarse aggregate other times it hit it.

From this we can justify the wide wheel test as a laboratory test to measure abrasion as it abrades both matrix and aggregate.

As part of my evaluation, the effect of age on the abrasion resistance was checked. The results were:

Age of test	Groove Width	
	Block 1	Block 2
3	18.0mm	15.0mm
7	17.0mm	18.0mm
14	18.0mm	18.0mm
21	18.0mm	19.0mm

Apart from the one low result, age has little effect on the final abrasion value but I would recommend that the test be carried out at least 21 days after manufacture.

I do not envisage any change with age, as modern cements are designed for a maximum 28 day strength with little strength gain over a twelve month period.

Other researchers have investigated alternative methods, for example in Germany, correlation between this test and the Bohmë test have been carried out and further work is continuing to obtain further correlation following changes in the apparatus and method of conducting the test.

Conclusion

It can be concluded, from the two tables of results, when adjustments are made for the calibration of the machine, the average results are very close in the range of +0,5 to -2mm between laboratories..

From this work and past history of products in use in abrasive locations, we have recommended that for concrete block paving to comply, the groove width shall not exceed 23 mm and for flags the groove width shall not exceed 30 mm.

As we obtain more information and experience with the test method and practice these values may change.

Diagram 1

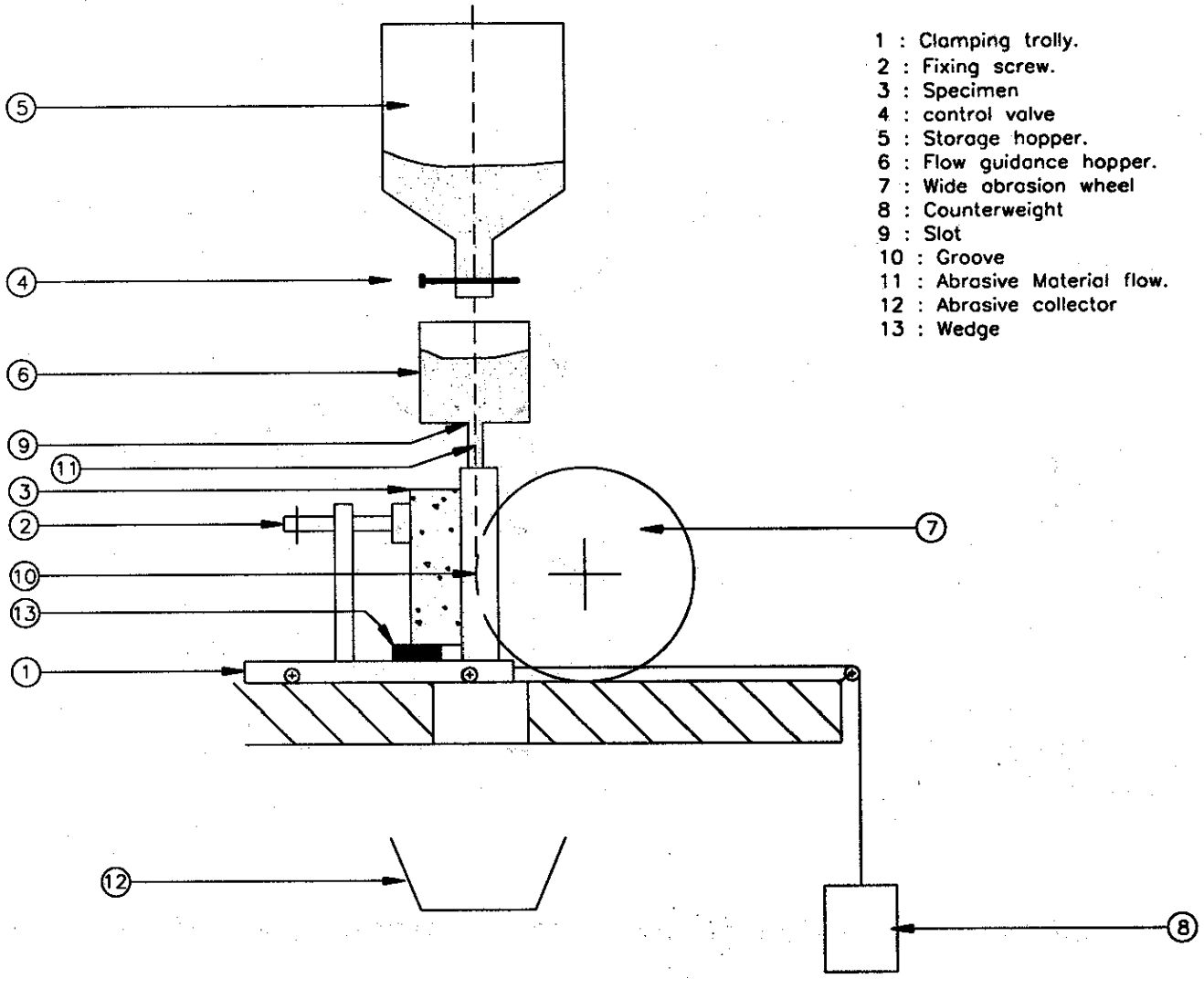

Principal of wearing machine

Diagram 2

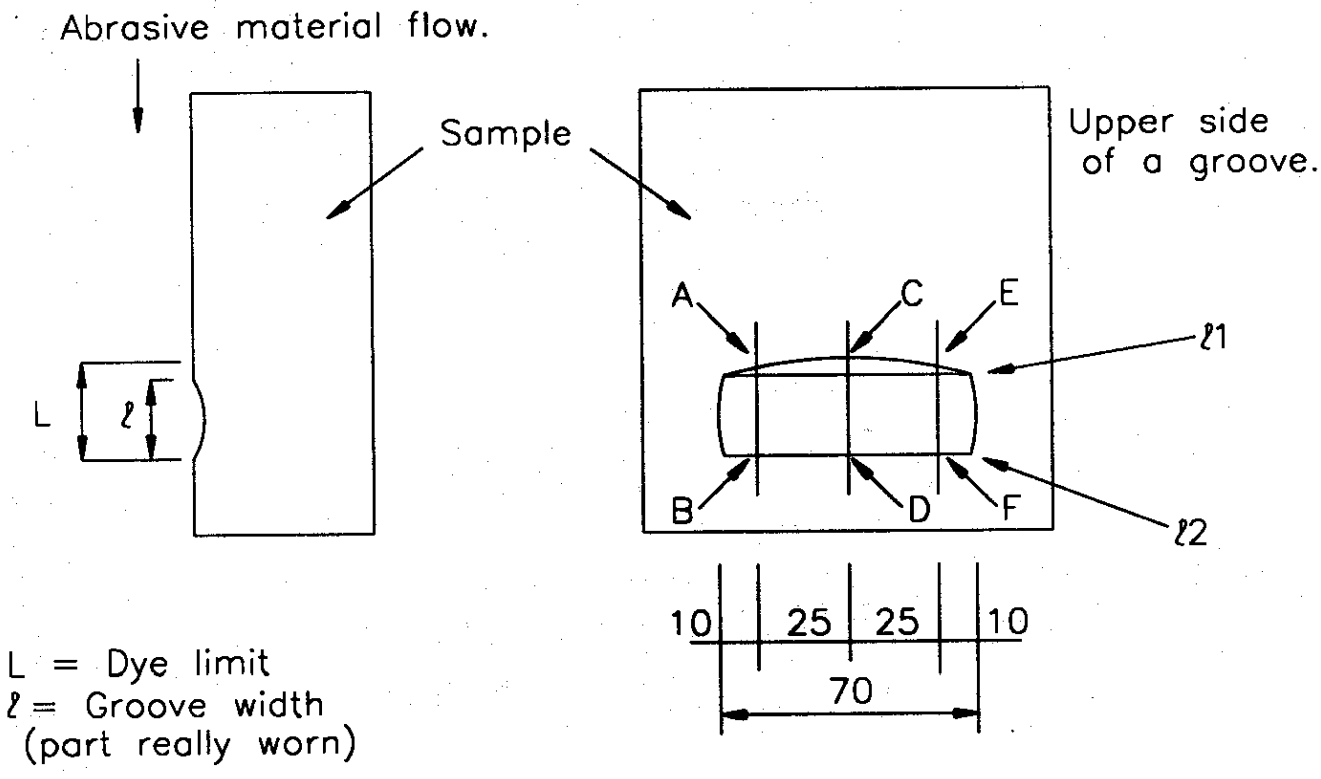

Section of a tested sample with an example of groove.