FLAGS AND BLOCKPAVING IN SWEDEN – THE DEVELOPMENT OF MARKET SHARES

Ulf Watz, Civil Engineer, Marketing Manager, S:t Eriks AB, Uppsala, Sweden.

SUMMARY

Comparing figures regarding the consumption of flags and concrete block paving per capita in different countries Sweden has an unique position. The consumption of flags is the highest in Europe. The paper discusses some explanations to this fact such as:
- the use of wet pressed superflags
- clientoriented qualitystandard
- the development of the wetpressmethod

Block paving has in Sweden in industrial heavyduty areas as well as in medium trafficated areas very hard price competition against contractorowned producers of asphalt. A design project is recently carried out to try to make CBP-pavings more competitive. It will be followed by an information canpaign towards designers, architects, contractors and clients containing reference areas and examples of good design and pratice.

1. MARKET SHARE OF CONCRETE PAVING IN SWEDEN COMPARED TO OTHER COUNTRIES.

Compared to most European countries the consumption of concrete paving products in Sweden is rather small. Fig. 1 shows the consumption measured in m^2/capita in Sweden compared to the consumption in Germany and Denmark.

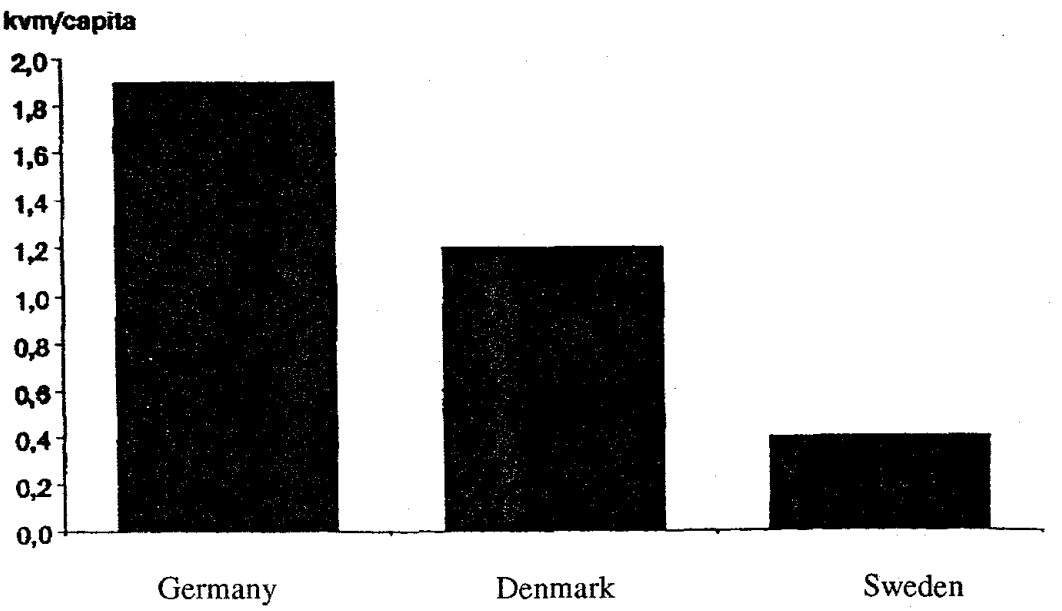

Fig. 1 Consumption of concrete paving products in Sweden, Denmark and Germany

It looks like Sweden is in a bottom position in the European league but Norway is behind with a consumption of 0.24 m^2/capita (1992). From these figures you might draw the conclusion that the further north you get in Europe the less consumption of concrete paving products.
Germany is not alone in the top, the Netherlands and Belgium are showing almost the same high figures as Germany. How come these big differences between Sweden and the Continent?
One of the answers is definitely tradition in pavement building. The Netherlands for instance have since centuries a tradition of pavement building with clay bricks. After the second world war there was a shortage of clay bricks that were replaced by concrete blocks and after that the concrete block paving was in on the Dutch Market.
An other answer is that asphalt seems to be relatively cheap in Sweden. The Swedish asphaltcompanies are usually owned by the building contractors and that is not the case in for instance Denmark. This may have a crucial effect on the competitiveness of asphalt.
An other interesting point of view on the use of concrete products in Sweden and on the Continent as well is that flags in Sweden have about 80 % of the paving market while in Germany block paving has about 80 %.

Counting consumption of flags per capita in Sweden it exceeds the one of Germany with 30 %. That makes Sweden number one in Europe regarding consumption of flags.
How come this unique position in Sweden?
Two important things are:

- The development and quality marketing of the wetpressed superflag by S:t Eriks AB
- The new standard for flags created in the early 1980's by producers of flags. This standard with quality limits for essential properties as breaking loads, load classes, freeze-thaw resistance etc has proved to be a very effective tool keeping flag pavements free from breaking and freezing to pieces. This is of course an important reason for consultants and contractors to continue using this kind of pavement.

2. THE WETPRESSED SUPERFLAG

Everybody familiar with basics in concrete technology knows that the water cement ratio (WCR) has a very definite effect on the total quality of concrete. The less WCR the better. The desireable value is about 0.4. The wet press method permits the flag concrete in the poured stadium to have a WCR of 0.7 which is a good thing as it makes it possible to fill the form extremely well. Then the wet concrete is pressed by 600 tons and at the same time the water that's not necessary for the proper curing of the cement is eliminated by vacuum. The WCR of the concrete is by that reduced to 0.4 which gives the cured flag excellent physical properties.

Machinator's- a subsidiary to S:t Eriks AB - wet presses are developed to give the products the best possible characteristics with regard to strength, frost resistance, abrasive wear and dimensional accuracy.
Comprehensive Swedish Standards stipulate in detail the testing procedure and quality requirements that apply in Sweden.

In accordance with Swedish Standard 22 71 09, concrete paving products are divided into four strength classes for different applications. The breaking load is defined as the load that a product can withstand applied at the centre of the product while it is supported at two points, see below illustration.

Fig. 2

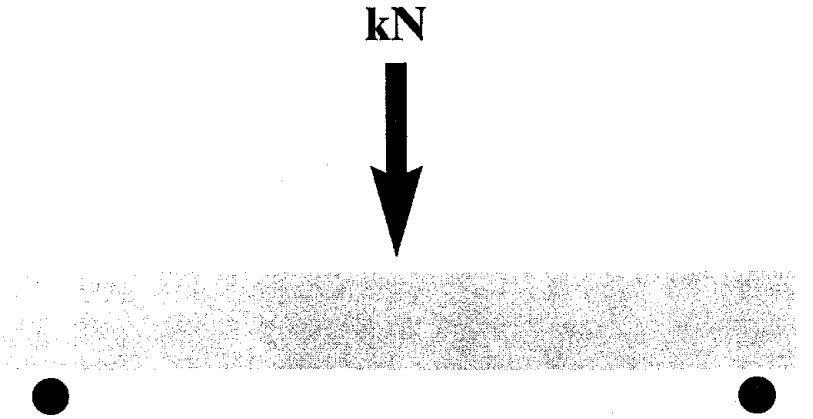

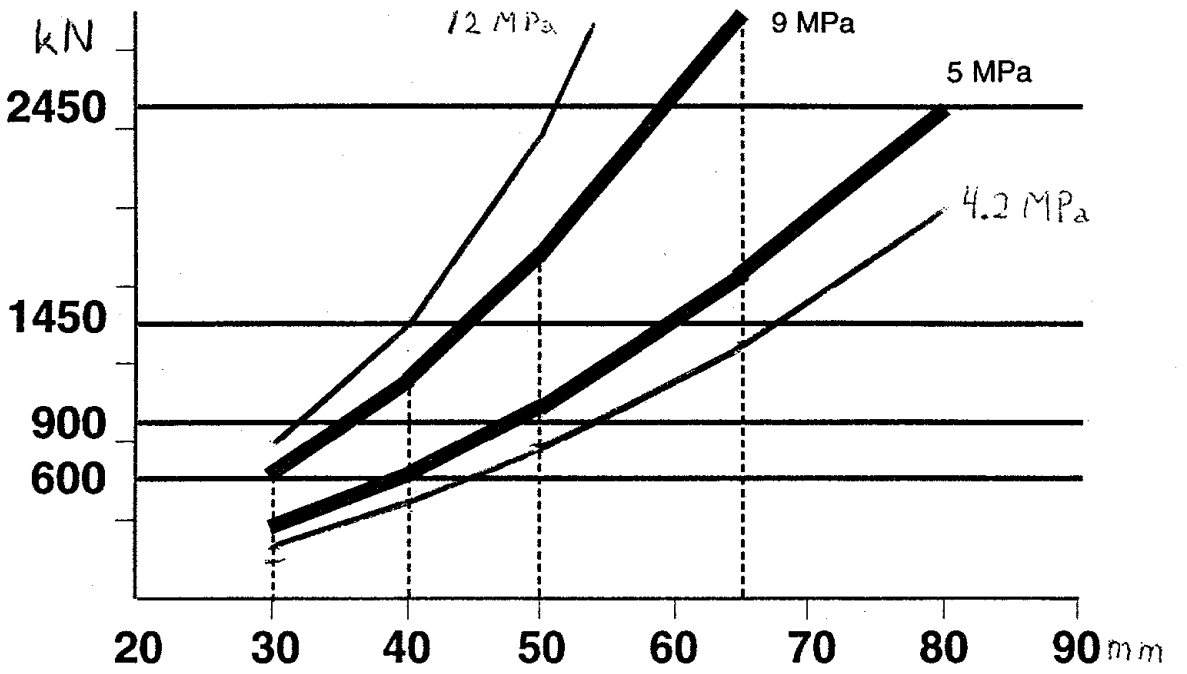

Hållfast-hetsklass	Minsta brottlast kN	Färg märkning	Exempel på användning
6	6,0	grön	Trädgårdar och Uteplatser
9	9,0	gul	Garageinfarter, Cykelvägar
14	14,5	blå	Gågator och Torg
25	25,5	röd	Gator och vägar, Bussterminaler och Bensinstationer

Fig 3

The diagram illustrates how the flexural strength (MPa) affects the relationship between breaking load and thickness of the paving stone.
The table shows the correlation between strength class, breaking load and examples of applications in Sweden.

Frost Resistance
The resistance of paving products to frost and salt are tested in accordance with Swedish Standard 13 72 25. Tests are carried out in 28 cycles (28 days) during which the products are repeatedly drenched with a 3% NaCl-solution, frozen and thawed. How many kilograms per square metre that scale off is then determined. For approval, not more than 2 kg/m^2 are allowed to scale off. The result achieved by Super Paving in these tests is 0.1 - 0.2 kg/m^2.

Abrasive Wear
Paving products are subjected to artificial wear in accordance with Swedish Standard 22 72 10 by a cast iron disc rotating against the flat surface of the product. The tests are carried out in four stages and the amount of material worn away is measured after each stage. Products must not show more than 1000 cm^3/m^2 for any of the tests in stages 3 and 4.
The result of the wet pressed Super Paving in these tests is 600 - 700 cm^3/m^2.

Fig 4

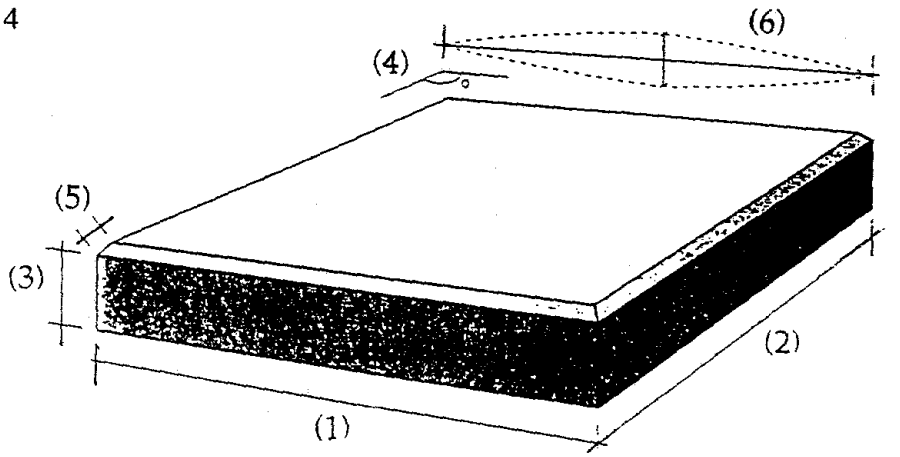

Dimensional Accuracy
Tolerances for the size of concrete paving products are stipulated in Swedish Standard 22 71 08. These include length (1), width (2), height (3), angles (4), chamfers (5) and warping (6). Thanks to the wet press procedure, the Super Paving has excellent dimensional accuracy.

The product range of wetpressed are wide today and still increasing.
Specially the steel-shot blasted flags have become very popular among architects and other clients.

The production process is continously developed towards higher effectivness and increasing the range of products possible to produce with competitivness.

3. IMPACT OF STANDARDIZATION ON FLAG SALES IN SWEDEN

The flagstandards introducted in Sweden in the early 1980's seems to have raised the quality of flags in Sweden significantly and thus saved flags from being used under false conditions and as a consequence loose credibility among clients and designers as a reliabel pavement construction. Examples of important things are:

- The strength qualities were put in a functional way; breaking loads instead of thickness and other dimensions.
  That means that it is up to the producer to determine the concrete quality and by that the required thickness of a flag to meet the load class in question (Fig 3).
- The load classes are corresponding with general classification of traffic loads in Swedish design manuals. This gives consultants good help in using the products in their daily design work and makes it possible that the proper flag strength quality is used corresponding to the expected traffic load and frequency.
- The freeze-thaw test method included was worked out by Professor Goran Fagerlund - world famous for his research in the freeze thaw field concrete. The test method has after that also been adapted as official method in Denmark and is now proposed as being the method in The European flag and block paving standard. The goal has been reached in Sweden as there are - to our knowledge hardly and complaints about frozen flags.

4. WHAT ABOUT THE FUTURE?

In Sweden we look with envy at the consumption figures of block paving in Denmark and on the Continent. We will try hard to reach these figures in the years to come. Of course we have to learn a lot from our collegues abroad to achieve that goal and I think we have to sharpen our argument very carefully because of the hard competition from asphalt.
Meanwhile we will not slow down the continueing marketing of flags that has been so successful.

Ulf Watz, S:t Eriks AB, Børjegatan 77, S-752 29 UPPSALA,
Telefax No. +46 18 55 01 03