OSLO AIRPORT FORNEBU – HEAVY AIRCRAFT PARKING STAND STRENGTHENED TARMAC CARRYING CAPACITY WITH LAYER OF CONCRETE BLOCK PAVING – AT LOW COST

Terje Liveng

The Oslo Airport Fornebu is facing its last days as an international airport. If everything works out as planned, the new main airport for the Oslo region located at Gardermoen will be ready for use in beginning of 1999.

Oslo Airport Fornebu was opened 1 June 1939, thus celebrating its 50th anniversary some few years ago. The development and the traffic conditions at Fornebu has greatly changed over the last years . Today Oslo Airport Fornebu serves approximately 7 million passengers and 140,000 aircraft movements per year. To handle this, Fornebu has two intersecting runways in use, one for the main traffic by jet driven aircrafts and one for general aviation and taxi traffic.

Over the last ten years, the terminal facilities at Fornebu has had a marvellous improvement. Today, the airport is a modern and effective terminal of international standard – just a few years before being closed down. The only thing which has not followed the improvement of the airport is the facilities of aircraft parking stand and access to and from the aircraft by passenger bridges.

Today Fornebu has a total of 24 aircraft parking stands at the main terminal, 20 of these are for use of aircraft code letter C and 4 for use of aircraft code letter D. Out of these 24 aircraft parking stands only 5 have access to the terminal by passenger bridges, and a concrete slab platform. The remaining 19 aircraft parking stands have asphalt surface.

Before dynamite and excavators entered the Fornebu area in late 30ths, this landscape was hilly with variable foundation conditions on a subsoil mainly consisting of slate and clay. Due to changing of aircrafts from small/light to big/heavy, and a more intensive use of each area, these conditions have caused partial settlement problems. Up till now, the most common procedure for repairing this type of damages has been to add another layer of asphalt, or, in some cases, to perform a partial exchange of materials.

The fact that no major effort has been done to improve the foundation conditions over the last years must be seen in the perspective that Fornebu has a relatively short remaining period of operation as an important airport. At all time, the superior objective when a repair is carried out, is to highlight the effect on air safety and punctuality for departure and arrival, at a lowest defensible cost.

The repair of aircraft stands is from time to time inevitable. A program is now being drawn for rehabilitation of all the aircraft stands along the main terminal. The program is based on the following criterias:

- no elevation of existing terrain level
- short time execution, with a minimized close down period for the parking stand
- only one aircraft parking stand closed at a time
- design lifetime of 5–7 years for the new platforms

ninimum of construction cost
ninimized use of asphalt on surface
for the last of the above listed items, it is due to the extremely high asphalt surface ıperatures that statistically occurs at Fornebu during the summer. As most of you may ve observed, this causes severe deformations of the surface under the static load of parked crafts.

cooperation between The Civil Aviation Administration at Fornebu (Ref. 2), the Contractor lmer AS (Ref. 3) and the Consulting Engineer Grøner (Ref. 1), the following recipe was ıluated and finally accepted for the coming rehabilitation program for all remaining aircraft king stands:

- partly removal of decomposed base materials
- construction of pressure relieving concrete platform
- flexible concrete block surface paving

is solution will satisfy all the technical criterias given for this rehabilitation.

minimize the extension of each platform, a registration of types of aircraft using the ferent parking stands has been made, as well as an evaluation of future use up to the date ıen all traffic is transferred to Gardermoen.

ese parking stands were mainly serving the aircraft models DC9/MD80 and B737. One of stands was also used for parking of aircraft code letter D (B767) as well as for military nsport served with a Lockheed C-141 StarLifter.

l stands were standardized in design to satisfy both DC9/MD80 and B737, with exception the military purpose stand, to ensure the main gear and the nosewheel of the aircraft ways being within the platform area, and in acceptable distance from the ground power unit nnection point.

ior to starting the construction work, the outline of the platform is marked on the surface. pproximately 1 m outside the position of the coming concrete block paved platform, the phalt is cut using a diamond cutter. Approximately 0.5 m on the inside of this cutting, phalt and base course is excavated to a dept of 0.4 m below the surface. Before installing levelling course of crushed rock 0-60 mm, the formation is carefully compacted. A ncrete slab with a steel net reinforcement is casted in place in full width without use of rmwork. The surface tolerance of this concrete slab must be within +/- 10 mm. The sand d for the concrete blocks is 2-3 cm thick and consists of sharp sand 0-4 mm.

n 80 mm UNI Coloc concrete block with a strength of 60 Mpa was chosen as paving aterial. To meet the stress of this application, it is vital that the concrete blocks are given fficient time to cure and achieve design strength. Some of the blocks installed during the ost busy production period later had to be replaced by the manufacturer when concrete block rners broke off due to insufficient curing.

To establish a full bearing capacity across the border between the concrete block and the surrounding asphalt paved areas, the following procedures has been followed:

- One layer of asphalt (Agb 11) was placed between the concrete block platform and the cutted edge of the adjacent asphalt, to a level approx. 4 cm below the top of the asphalt.
- Another 0.5 m width of old asphalt layer is milled to a depth of 4 cm (i.e. same level as the new layer).
- A top layer of 4 cm asphalt (Ab 11) is installed in a total width of 1.5 m to seal the joint between the cutted edge of old asphalt and the new layer of asphalt.

At Fornebu, as for most other airports, suction vehicles are used for cleaning the ramps. For this reason, it is very important to seal the joint sand between the concrete blocks. At Fornebu, a two layer ACM PAVSEEL was used. Layer no. 2 was applied minimum 24 hours after layer no. 1 to ensure the best result.

The construction time for a concrete block paved aircraft parking stand is, as described earlier, of great importance. Working within the ramp area, it is obvious that this activity represents a potential obstacle to the safe movements of aircrafts. From a traffic capacity point of view it is also of great importance to reduce the construction time for every parking stand to a minimum. The construction works at Fornebu are normally carried out during the night time when the airport is closed for landings and takeoffs and it is possible to have some open space around the construction site. When the weather conditions are good, that means no or only modest amounts of rain, each stand is closed only 3 days for rehabilitation.

The cost of rehabilitation is one of the main factors for choosing such a platform construction. In 1993, the price of a complete platform as above described was USD 9,500 (NOK 70,000) inclusive VAT. The unit prices for this platform is very much depending on the total volume of the work, and this price refers to the construction of a total of 8 parking stands.

The experience with concrete block paved platforms at Fornebu is excellent. The first platform was constructed in 1991 and today there are very small indications on settlement or damaged blocks. The surface maintenance is very simple and surface runoff is satisfactory. Another element which is very much appreciated is the aesthetics, as well as the visual signal to the aircraft captain where to park in front of the terminal.

REFERENCES:

1. GRØNER AS – Engineering manager Terje Liveng
   PO Box 414, 1322 HØVIK – NORWAY
   Telefax: + 47 67 12 58 40

2. Civil Aviation Administration Fornebu – Project manager Trond Thorvaldsen
   Telefax: + 47 67 12 41 31

3. Selmer AS – Site manager Roar Ombye
   Telefax: + 47 67 53 42 70

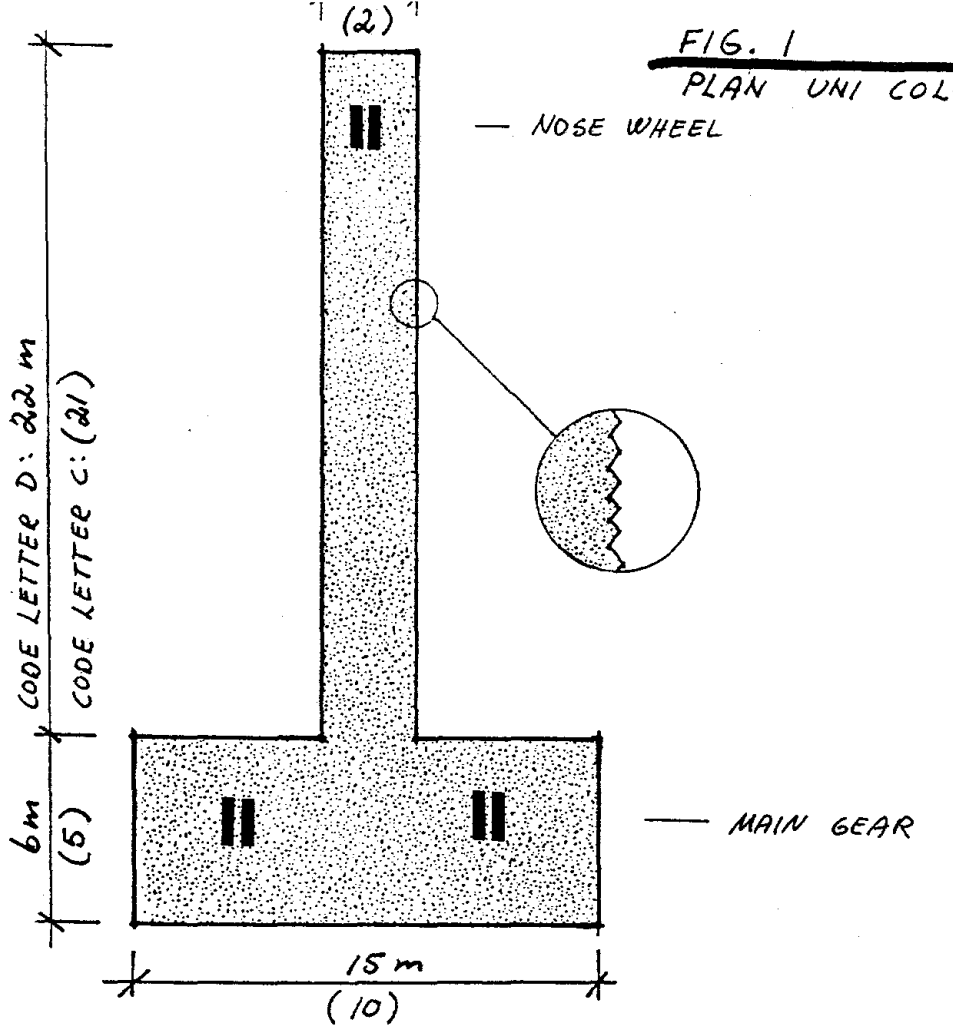

FIG. 1
PLAN UNI COLOC

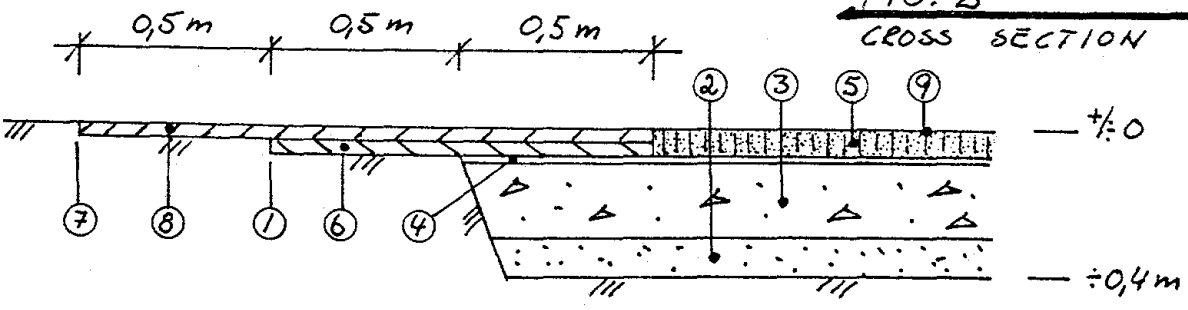

FIG. 2
CROSS SECTION

① CUTTING EDGE
② LEVELLING COURSE (t=10cm) CRUSHED ROCK 0-60 MM
③ CONCRETE ATE (t=20cm) STEEL NET K257
④ SAND BED (t=2-3cm) SHARP SAND 0-4 MM
⑤ UNI COLOC (t=8 cm)
⑥ ASPHALT (t=4 cm)
⑦ MILLING EDGE
⑧ ASPHALT (t=4 cm)
⑨ JOINT SAND WITH 2 LAYER OF ACM PAVSEEL