Wear Tests on Concrete Block Paving Materials

T. HORIGUCHI
Associate Professor, Hokkaido Institute of Technology, Sapporo, Japan

A. KASAHARA
Professor, Hokkaido Institute of Technology, Sapporo, Japan

and

S. IKEDA
Secretary General, Association of Hokkaido Interlocking Block Manufacturers, Sapporo, Japan

SUMMARY

In this paper, four different types of wear test were conducted to assess the wear resistance of concrete block paving materials. These are DW test with dressing wheels (ASTM C 779-B), BB test with ball bearings (ASTM C 779-C) and RC test with steel cutters (ASTM C 944), and SF test with steel balls, for simulating the surface fatigue wear action, which has been proposed as a promising test method for ductile materials such as cementitious materials.

The factors affecting the wear resistance include two main factors in surface conditions of concrete block. The first factor, examined in this paper, is factor of mix conditions. The effects of water-cement ratio and sand aggregate ratio were investigated for the small element concrete block. The other factor is factor of environmental conditions, such as surface treatment and curing regime.

It is found that measured wear depth by each test method showed a different value, and accordingly that the effectiveness of factors on wear resistance is not always the same sensitivity. Consequently, it should be very important to select a wear test method by considering expected wear depth which is related to paving environment. The SF test showed maximum sensitivity on the effect of mix conditions and on the value of wear index.
It is also found that the wear resistance increases with increasing the compressive strength up to certain value, but there is optimum limitation for rational improvement of wear resistance.

1. INTRODUCTION

Making a wear resistant concrete is one of the most important object for constructors and researchers in the world. Then, some problems will arise that how to make a wear resistant concrete, or how to measure it. Still more, how to define the wear resistance of concrete for paving materials. There exists a considerable literature on the wear of concrete using different wear testing methods. However, the characteristic of this wear resistance is not always the same, since concrete surface is subjected to different types of wear. As the results it could be possible to get a contradictive result (relatively different values of wear resistance will be collected by the same quality of concrete specimens).
This paper presents a method for evaluating the wear resistance of concrete. With using several types of concrete mixes, four different testing methods were conducted for evaluating the wear characteristics.

2. TESTING PROCEDURE

In this paper, four different types of wear test were conducted to assess the resistance of concrete block paving materials. These are DW test, BB test, RC test and SF test. The four types of testing consist of three standard test methods of ASTM (ASTM C 779 procedure B, procedure C and C 944) , and the surface fatigue wear test which has been proposed as a promising test method for ductile materials such as cementitious materials[1].

The DW wear test was conducted by using the slightly modified ASTM C 779 procedure B method. The method was used for simulating the wear action by heavy tire and steel wheel traffics [2]. This apparatus consists of two sets of steel dressing wheels riding in a circular path over a horizontal concrete surface. The steel dressing wheels of 60 mm outside diameter with 18 flattened points operate by impact and sliding friction.

The BB wear test apparatus was conducted by using the method according to ASTM C 779 procedure C. This apparatus consists of a motordriven, hollow, vertical shaft resting on and turning ball bearings which rest on the concrete surfaces. Eight steel balls of 18.25 mm diameter rotate rapidly (1000 rpm) under high contact pressures.

The RC wear test apparatus was applied for the method according to ASTM C 944. A wear device of rotating cutter was used in which 24 grinding steel dressing wheels are mounted. This test method has been successfully used in the quality control of highway and bridge concrete subject to traffic.

The SF test apparatus is schematically shown in Fig. 1. This apparatus consists of a mechanical shaker for shaking mold containing a disk-shaped concrete specimen, water and 8 steel balls in a vertical direction at 8 Hz with a 25 mm stroke. This test method has been successfully used in several countries for evaluating the wear damages by studded tires in winter [3,4,5].

3. MATERIALS

Table 1 shows the mix conditions of test specimens. The factors affecting the wear resistance of concrete block, examined in this paper, include two main factors in surface conditions of concrete. The ones are factors of mix conditions. Three levels of water-cement ratios, 24.3 %, 28.6% and 32.9% are conducted in this study. Sand aggregate ratio are also varied as 70.0%, 72.4% and 77.1%.
The others are factors of environmental conditions, such as curing regime and surface treatment. As for the curing regime, a concrete sealing method was applied for two days from molding period. After concrete specimens were sealed in 2 days, ordinary wet curing was applied. As a surface treatment, a polymer impregnated method is applied with MMA polymer. A rate of polymerization was calculated to be 5.1% with which 30 min. of impregnation and 150 min. of polymerization are applied.

4. TEST RESULTS AND DISCUSSION

The test results of physical properties are summarized in Table 2. In this table, there is a contradiction about the compressive strength in No. 1, 2 and 3.The contradiction is that the compressive strength increase with increasing the water-cement ratio. This result can be explained that there is an optimum water-cement ratio which is not smaller than 37.1 %. As can be seen in the table, the highest density is found in No. 3 specimen which shows highest compressive strength among these three mixes. The effect of sand aggregate ratio on the compressive strength is not significant in this study. The method of curing regime affect on the compressive strength. The compressive strength increases when the sealing method is applied. The effect of polymer impregnation on the compressive strength is very significant.
Fig. 2 shows the relationships between the average wear depth and water cement ratio with 4 different types of wear tests. It is shown in this figure that the wear depth decreases with increasing the water cement ratio for all of the tests. The rates of decreases in wear depth for each test method are about the same with increasing the water cement ratio. As it is already mentioned in the result of compressive strength, it is not surprising that the wear resistance increase with increasing the water cement ratio. It should be better to say that the wear resistance increase with increasing the rate of compaction.
Fig. 3 shows the relationships between the average wear depth and sand aggregate ratio. As the figure shown, the wear depth of SF test decreases with increasing the sand aggregate ratio. This result doesn't agree with the results of other tests methods, and also with the general knowledge of normal concrete in the ancient works of wear technology[6, 7]. Generally, it is well known that the wear resistance decreases with increasing the sand aggregate ratio. In the case of this study such as compacted concrete made by high pressure and vibration which is quite different with molded concrete, aforementioned theory couldn't be applied for wear test of impact action. It can be seen that SF test is relatively more sensitive for evaluating the effect of different mix conditions on wear resistance than the other

test methods.
The effect of surface treatments on the wear resistance is shown in the Fig. 4. It is clear that the polymer impregnated method is very effective for making high wear resistant concrete. The result of SF test shows most significant difference in surface treatment among the other test results.
Fig. 5 shows the relationships between the average wear depth and the compressive strength. As can be seen in this figure, the wear depth decreases with increasing the compressive strength for all the results. This is not new investigation. The important result is that the wear resistance increase very rapidly with increasing the compressive strength up to 65 MPa, and after increase very gently. This fact indicates that there will be an optimum limit of compressive strength for equivalent wear resistance.
Fig. 6 shows the relationship between the wear index and the compressive strength. The wear index (Iw) can be defined as

$$Iw = \sqrt{N} / hw \qquad (1)$$

Where N is the number of wear device revolutions (thousands) and hw is the average wear depth (mm). Shackel et. al. reported that an abrasion index, which is the same as wear index, can provide a simple and rapid indicator of the abrasion resistance of pavers [8]. From the figure, it is shown that the wear indices of DW, BB, and RC tests increase very slowly with increasing the compressive strength, although the wear index of SF test increases very rapidly. This result indicates that SF test is the most sensitive test method for applying the wear index to evaluation of concrete wear.

5. CONCLUSIONS

In this study, four types of wear test methods are conducted. These are DW test with dressing wheels, BB test with ball bearings and RC test with steel cutters, and SF test with steel balls, respectively. From the tests results, following conclusions could be drawn.

(1) It is found that measured wear depth by each test method showed a different value, and accordingly that the effectiveness of factors on wear resistance is not always the same degree. Consequently, it should be very important to select a wear test method by considering expected wear depth which is related to paving environment.
(2) SF test is found to be very sensitive test method for evaluating the effect of mix conditions on wear resistance of concrete. Moreover it is also found that SF test is very sensitive test method for evaluating the wear index.
(3) The wear resistance of concrete block increases rapidly with the compressive strength up to 65 MPa. Nevertheless there will be an optimum limit of compressive strength for equivalent high wear-resistant concrete.

REFERENCES

[1] T. Horiguchi : " Wear of Concrete - The state of the arts - ", Concrete Journal, Vol. 31, No. 10, pp. 17-27, 1993

[2] M.G. Alexander :" Towards Standard Tests for Abrasion Resistance of Concrete, Report on a limited number of tests studied, with a critical evaluation ", Materiaux et Constructions, Vol. 18, No. 106, 1985

[3] K. Schulze :" Festlegung eines Prüfverfahrens zur Verschleissnachamung anhand von Verschleissmessungen auf 43 Versuchsfeldern der BAB Salzburg - Munchen ", Strasse und Autobahn, 1973

[4] T. Horiguchi, A.M.Paillère, J.J. Serranno :" Amélioration Bétons Armés de Fibre d'Acier par l"Addition des Polymères Divers, Proc. of International Symposium on Future for Plastics in Building and in Civil Engineerings, 1984

[5] T. Horiguchi :" Surface Fatigue Wear Mechanism of Concrete ", Proc. of the 4th International Conf. on D.B.M.C., Pergamon Press, Vol. 2, 1987

[6] J. Baron, G. Bonnet, J.L. Nissoux and H. Rapin :" Elément de réflection sur l"Usure et la Rugosité des Revêtements en Béton Hydraulique ", Bull. de Liai. des Laboratoires des Ponts et Chaussées, No. 77, 1975

[7] N. Pedersen :" Wear Resistant Concrete for Pavements ", Concrete International, Vol. 10, No. 8, 1988

[8] B. Shackel and X. Shi :" The Abrasion Testing of Concrete Pavers ", Proc. of Fourth International Concrete Block Paving Conference PAVE 92, 1992

ACKNOWLEDGEMENTS

The authors gratefully acknowledge the support of the Central Research Laboratory of Chichibu Cement Co., Ltd. for this project. The help of Mr. Suda and Mr. Sugawara was most appreciated.

Table 1 - Summary of mix conditions

No.	W/C	S/a	S :G_C	:S_C(*)	C	W	Curing condition	Surface treatment
1	28.6					100		
2	32.9	72.4	0.4 :0.3	:0.3	350	115	Normal	
3	37.1					130		
4		67.8	0.3 :0.35	:0.35				
5	32.9	72.4	0.4 :0.3	:0.3	350	115	Normal	
6		77.0	0.5 :0.25	:0.25				
7							Normal	
8	32.9	72.4	0.4 :0.3	:0.3	350	115	Sealed	
9								PIC

(*) S is a crushed fine aggregate smaller than 4 mm.
G_C is a crushed coarse aggregate greater than 5 mm and smaller than 13 mm.
S_C is a crushed aggregate greater than 2.5 mm and smaller than 5 mm.

Table 2 - Summary of test results of physical properties

No.	Rate of Compaction, %	Compressive strength, MPa
1	86.1	41.3
2	88.3	50.9
3	92.7	65.1
4	88.1	49.3
5	88.3	50.9
6	89.8	51.0
7	88.3	50.9
8	88.9	58.4
9	91.2	116.9

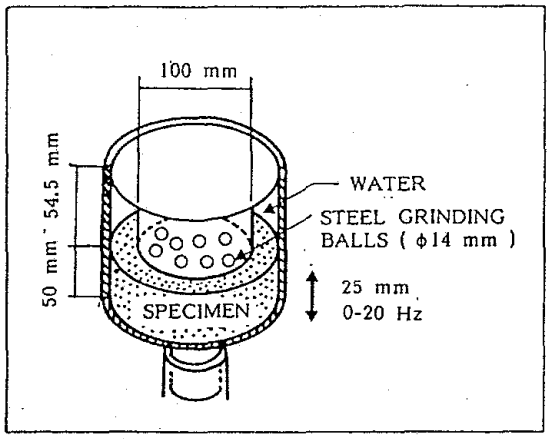

Fig. 1 - Schematical SF test with 8 steel balls

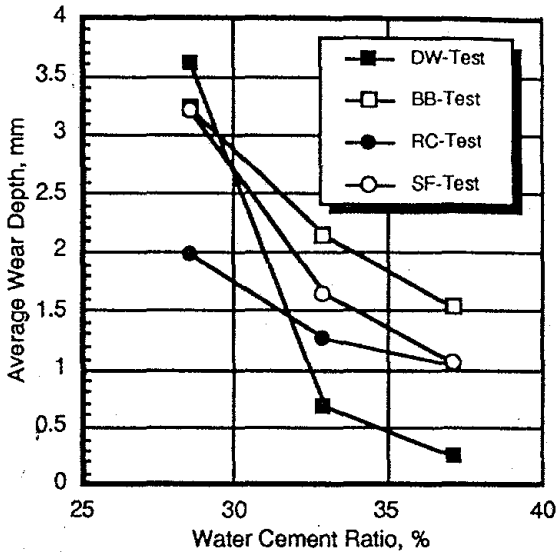

Fig. 2 - Effect of water cement ratio on the average wear depth

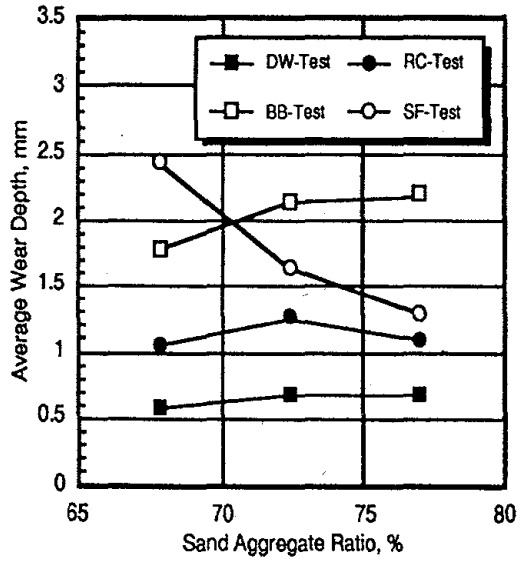

Fig. 3 - Effect of sand aggregate ratio on the average wear depth

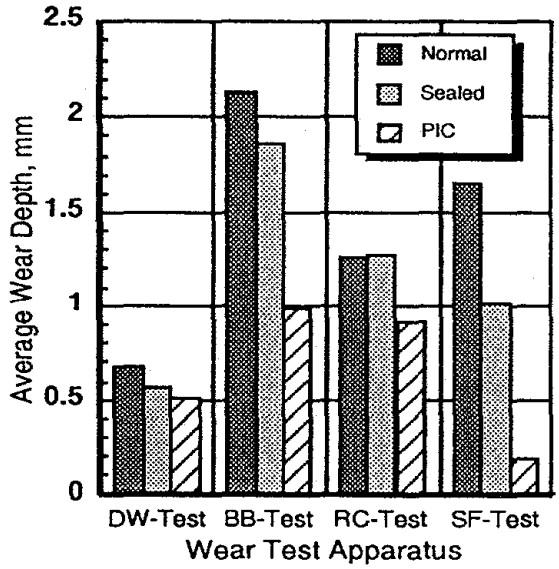

Fig. 4 - Effect of surface treatment on the average wear depth for different types of the test methods

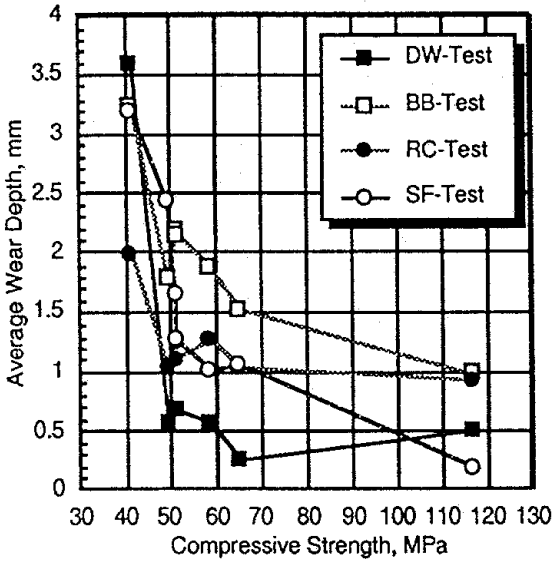

Fig. 5 - Relationship between the average wear depth and the compressive strength

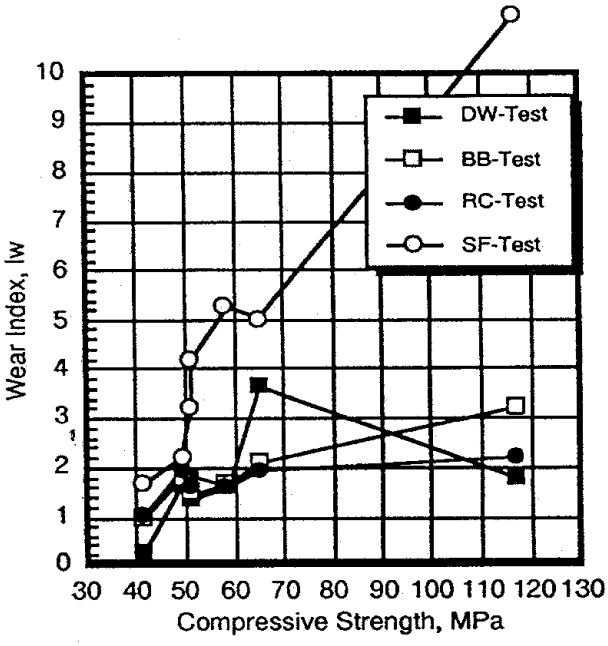

Fig. 6 - Relationship between the Wear Index and the compressive strength