INTERLOCKING CONCRETE BLOCK PAVEMENT FOR HEAVY ABRASIVE CATERPILLAR LOADING

Ilan Ishai and Moshe Livneh

Transportation Research Institute, Technion, Haifa, Israel

SUMMARY

This paper describes a case study in which interlocking concrete block pavement was designed and constructed for handling and maintenance of heavy caterpillar vehicles. The paper describes and presents in detail the following aspects of this specific case and technology: (a) preliminary consideration and feasibility test section; (b) cost-benefit considerations; (c) pavement design and cross section details; (d) quality requirements for blocks and sand bedding;(e) blocks production; (f) quality control of blocks -- procedure, problems and solutions; (g) construction procedure; (h) actual caterpillar loading test.

The specific project described in this paper is in its last construction stages, and will be open soon to service. The successful performance during production, construction and actual loading tests permits this introduction of the suggested quality control criteria, testing procedures and construction specifications.

1. INTRODUCTION

As a consequence of the Peace Treaty with Egypt and the Sinai Peninsula evacuation, a large scale of civil and military construction is in progress in the Israeli Negev under desert and arid climatic conditions.

One phase of such construction included pavement surfaces needed for handling, storage and maintenance of caterpillar vehicles such as: tractors, tanks, cranes, etc. The natural conventional solutions for such pavement surfaces were jointed concrete slab pavements. However, due to the limitation of such rigid pavements, with regard to the wide temperature gradients existing in the area, and to the excessive joints damage under such loading, an interlocking concrete block pavement was considered, designed and constructed.

This paper describes a case study in which interlocking concrete block pavement was designed and constructed for handling and maintenance of heavy caterpillar vehicles. The paper presents in details the different technical aspects and factors involved in this specific case, and technology.

The specific project described in this paper is in its last construction stages, and will be open to service in the coming months. The successful performance during production, construction, and actual loading tests, permits the introduction of suggested quality control criteria, testing procedures and construction specifications. These all will be described in details in the paper.

2. PRELIMINARY CONSIDERATIONS AND TEST SECTION

The specific need for a proper substitution of the conventional jointed rigid pavement to accommodate caterpillar loading under desert climatic conditions, was raised in Israel in the beginning of 1979. At this time several scientific and technical reports, which summarized the beginning of the modern revival of concret-block paving, were available from different parts of the world (1,2,3,4). The application of this technology, with its interlocking effect, to roads and paved areas carrying heavy and abrasive loads (such as ports and storage depots) made it a feasible and attractive alternative for the specific paving needs.

Accordingly, a preliminary technical and analytical survey of the concrete block paving technology was performed (5). The conclusions and recommendations of this survey were positive. They called for a further development of this alternative to include actual test sections for observing different types of blocks, different paving techniques and different types of loads and loading conditions.

Consequently an uncontroled test section was constructed as a part of a newly paved concrete storage area for caterpillar vehicles. It consisted of 8 and 10 cm regular blocks which didn't get any special treatment for abrasion. The test section was subjected first to accelerated traffic of various caterpillar vehicles and then was left to the routine functional traffic of the entire storage area.

Qualitative observations of the test section condition have shown that despite some surface damages, mainly due to abrasion and cases of block edges breakage, the general performance and integrity of the tested pavement seems to be reasonable under the severe loading conditions. As a comparison, only minor damages at the joints edges occurred in the rigid pavement adjacent to the test section.

A decision was taken to include an interlocking concrete block pavement as a second bid - alternative for a conventional rigid pavement. This, after the completion of a proper design process and a creation of proper specification and quality control program for the concrete blocks and the pavement. The decision of selecting one of the alternatives is to be determined by the bid results after the application of a proper cost-benefit correction factor.

3. COST-BENEFIT CORRECTION FACTOR

Based on the test section performance, and on local experience, it was assumed that a properly designed rigid concrete pavement is superior to a concrete block pavement with respect to amount of maintenance needed and to total expected life period. Therefore, in order to compare these two types of pavements, the cost of block pavement should be multiplied by a cost-benefit correction factor.

The basis for the comparison is the equivalent annual cost expected for each type of pavements. This equivalent cost (EAC) is composed of:

a. Total construction cost divided to the expected life period (ACC).

b. Annual maintenance cost (AMC)

The following values were introduced in the cost analysis (6):

a. The annual interest rate - 8%.

b. The annual maintenance cost for rigid concrete pavement (AMC_r) - 1% of construction cost.

c. The annual maintenance cost for block pavement (AMC_b) - 4% of construction cost.

d. Expected life period for rigid concrete pavement -- 20 years.

e. Expected life period for block pavement -- 15 years.

By applying these values with the model, the equivalent annual costs for the rigid and block pavements are as follows:

$$EAC_r = 0.10185 \cdot ACC_r + 0.01 \cdot ACC_r = 0.11185 \cdot ACC_r \quad (1)$$

$$EAC_b = 0.11683 \cdot ACC_b + 0.04 \cdot ACC_b = 0.15683 \cdot ACC_b \quad (2)$$

The balance point is reached when $EAC_r = EAC_b$. Under this condition:

$$ACC_r = \frac{0.15683}{0.11185} ACC_b = 1.4\ ACC_b \quad (3)$$

This implies that the cost-benefit correction factor for the concrete block pavement equals 1.4. It means that the construction cost of the block pavement should be multiplied by 1.4 for a meaningful comparison with the cost of the rigid concrete pavement.

In the actual bid for the specific project the cost-benefit correction factor was applied and a block pavement offer had won the job.

4. PAVEMENT DESIGN

The design of the concrete block pavement was based on a conventional flexible pavement design with application of equivalency factors for the blocks and sand bedding.

The design parameters and values for the specific location were as follows:

Design subgrade CBR - 5%
Traffic category - Very heavy (VH)
Climatic condition - Arid zone

Using the Israeli Pavement Design standards and curves for the arid zone location, the appropriate flexible pavement structure is:

Bituminous concrete courses (Binder and wearing)	- 10 cm
Crushed graded base course	- 18 cm
Subbase course	- 18 cm

The following layer equivalencies were used for substituting the flexible pavement to a concrete block pavement (2,4,7):

Concrete blocks layer	- 1.0
Bituminous concrete layer	- 1.5
Base course layer	- 2.5
Sand bedding layer	- 2.5
Subbase course layer	- 3.0

By applying the above layer equivalencies, the following concrete block pavement structure was suggested for the design:

Interlocking concrete blocks layer ("UNI" type)	- 10 cm
Sand bedding layer	- 4 cm
Subbase course (type A)	- 26 cm
Total thickness of pavement structure	- 40 cm

The pavement is to be based on a compacted subgrade. Requirements for the subgrades as well as for the subbase course are identical to those specified for a flexible pavement.

5. TYPICAL CROSS SECTION

Figure 1 demonstrates the typical cross section of the concrete block pavement at the storage areas and connecting roads. A concrete edge element was introduced between the pavement and the shoulders. It was designed to support the block pavement and to withstand excessive horizontal forces. The concrete edge beam is to be casted in place prior to the construction of the pavement layers.

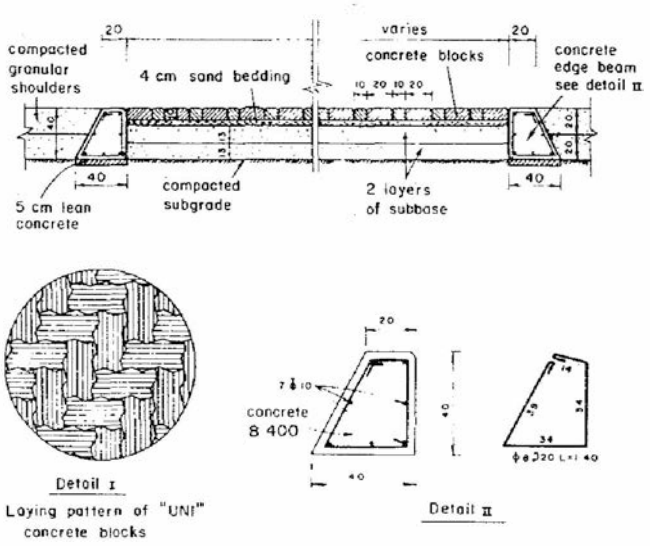

Figure 1: A typical cross section of the concrete block pavement.

6. QUALITY REQUIREMENTS FOR BLOCKS AND SAND

6.1 Blocks

The quality requirements for the interlocking blocks were related to type, materials, production, dimensions, curing and physical properties after curing. All these requirements were based on the Israeli standards related to superior quality industrialized prefabricated concrete products.

The physical criteria for the block were essentially based on the requirements of the Israeli Standards Nos. IS-26, IS-106 and IS-108, for a B-600 type concrete (the highest quality specified with a nominal compressive strength of f_n = 600 kg/cm^2). Quantitatively the physical requirement of the cured blocks (after 28 days) are presented in Table 1.

Table 1: Physical requirements for the concrete blocks

Property	Average Value (n > 6)	None of the samples will possess a value of:
compressive strength (kg/cm^2)	$f_c > 1.15 f_n$ > 690	< $0.75 f_c$ < 520
bending strength (kg/cm^2)	> 70	< 52
Resistance to abrasion (mm)	< 2.0	> 2.3

The compressive strength is to be tested on 10 x 10 cm sawed cubical samples coated with a sulfure leveling capping.

The bending strength is to be tested on the complete block resting on two supports near the edges of its long dimension. A point load is applied in the middle.

The abrasion resistance is to be tested on a sawed sample according to the "wear test with the grinding wheel according to Böhme" (German Standard No. DIN 52108) with application of 440 revolutions.

6.2 Bedding and Filling Sands

The sand bedding underneath the block is to consist of pourable, non-plastic, free of dust and organic substances dune sand. The moisture content of the sand during laying should be less than 4%.

The joints filling sand is to consist of fine clean, angular, graded quarry sand (all passing the #10 sieve).

7. BLOCKS PRODUCTION

The "UNI" type HD10 blocks were produced in a newly erected plant with a new line specially designed and constructed for concrete blocks production. The production procedure was fully automated and controlled.

In general high quality aggregates were used for the blocks (hard gravel, flint, dolomite or basalt), together with Portland cement type 300. In the production process a thin layer of quartz was penetrated to the upper surface of the block. After forming and compaction the blocks were cured in trays for several days in a controlled moisture chamber, and then piled and stored in the factory yard for a completion of 30 days minimum, before testing, approval and shipment to the site.

Table 2 summarizes the basic details of the first years of production of "UNI" blocks for this specific project:

Table 2: Details of the first year production of "UNI" blocks for the project

Period	Production quantity (m^2)	Type of Aggregate
May 1982	10,100	Crushed gravel with flint
June 1982	9,900	"
September 1982	7,400	"
1-16 October 1982	6,900	"
17-31 October 1982	6,200	Dolomite with basalt
January 1983	5,200	"
February 1983	6,900	"
1-17 March 1983	3,800	"
17-31 March 1983	6,500	Dolomite, basalt, gravel and flint
April 1983	2,500	"

8. QUALITY CONTROL

8.1 General Procedure

The quality control (Q.C.) of the block production for the project was performed by an independent authorized laboratory (the construction laboratory of the Standard Institution of Israel -- southern office). The following actions were involved in the Q.C. procedure:

a. Visual inspection of trays for immediate elimination of faulted blocks right after forming and compaction.

b. Random selection of a daily sample (minimum 6 blocks for each test).

c. Testing of samples 28 days after production (for compressive strength, bending strength and abrasion).

d. Analysis of results by the project designer (who provided a superior supervision for the project).

e. Approval or rejection of the daily lot for shipment to the site.

f. In case of rejection, selecting a second sample for a second (and last) retesting.

8.2 Quality Control Problems

During the production and quality control procedures several problems were developed with relation to testing, sampling and quality of the blocks. Many of these problems were due to the fact that a new product, a new plant, and unfamiliar sources of aggregates are involved. The following major problems characterize the production and quality control during the first year:

a. The use of a single type of aggregate resulted with a product that did not comply entirely with all of the three quality criteria.

b. The use of cubical samples for the compressive test resulted with a high scatter in the results, and a high frequency of very low values (down to 200 kg/cm^2).

c. The bending strengths of dry cured blocks were somewhat lower than expected and specified.

d. Due to the inavailability of the high quality aggregate, as specified, the abrasion requirement had to be modified to include the testing of abrasion resistance also at 1.0 cm depth from the top surface of the block.

The following solutions were tried and successfully accepted.

1. During the sawing process of the cubical samples many cases of uneven and non-perpendicular faces were obtained. This created samples with significant reduction of compressive strength and a high scatter of the results (8). To overcome this problem the compressive strength was also tested on drilled cylindrical cores of 7.5 cm diameter and 7.5 cm height. The results were characterized by significant increase in the average values of compressive strength and, in many cases, by decrease in variability of results, as can be seen in Table 3.

Table 3. Comparison of compressive strength results as tested on cylindrical and cubical samples.

	Cubical			Cylindrical		
Production Date	Number of Spec.	Average Compres. Strength (kg/cm^2)	Low Value of Compres. strength (kg/cm^2)	Number of Spec.	Average Compres. Strength (kg/cm^2)	Low Value of Compres. Strength (kg/cm^2)
6.5.82	8	608	516	8	791	720
9.5.82	8	629	526	7	687	607
17.5.82	6	660	470	8	746	585
18.5.82	6	679	637	8	781	713
20.5.82	8	668	635	8	762	648
24.5.82	8	658	606	8	777	721
"	7	602	543	8	618	462
"	8	584	427	8	763	630
25.5.82	7	606	487	8	734	632
26.5.82	8	594	533	8	733	525
"	8	611	461	8	722	594
"	8	619	551	8	726	630
30.5.82	8	615	563	8	705	599
"	8	677	638	8	697	596
1.6.83	8	621	486	8	704	607
"	8	633	488	8	742	585
average		628	535		730	616

As a result, all compression tests, starting July 1982, were performed on drilled cylindrical cones.

2. The relative low values of the bending strength were mainly due to the dry curing of the blocks during the period of 25 days between removal from moisture chambers and testing. Under these conditions "hair-line" cracks were developed during the dry hardening of the concrete, causing a decrease in the flexure resistance of the blocks. To overcome this deficiency a trial testing was made on blocks which were soaked in water after their removal from moisture chambers. Table 4 summarizes comparative results of bending strength obtained using the two methods of curing.

   It should be noted that the different curing procedures didn't effect the compressive test results, nor the abrasion resistance of the blocks. Based on the trend expressed by Table 4 all bending test samples, starting August 1982, were soaked in water during the curing period.

Table 4. Comparison of bending strength results obtained after dry and wet curing.

Production date	Average Bending Strength - wet curing (kg/cm^2)	Average Bending Strength - dry curing (kg/cm^2)	Bending Strength Difference (kg/cm)	Bending Strength Difference (%)
27.6.82	84	78	6	7.7
"	82	72	10	13.9
28.6.82	87	72	15	20.8
29.6.82	75	71	4	5.6
"	78	64	14	21.9
"	80	67	13	19.4
30.6.82	84	74	10	13.5
"	85	75	10	13.3
"	85	77	8	10.4
1.7.82	85	71	14	19.7
"	75	69	4	5.8
Average	82	72	10	13.9

3. Due to the lack of quality quarry aggregates in the vicinity of the plant, a crushed treated pit run gravel was used for the first period of production (see Table 2). The gravel was naturally mixed with 5-20 percent of flint particles. Despite the treatment of the aggregate (crushing, screening and washing) its properties varied with respect to composition and to the content of deleterious particles. The results were both low values and high variability in compressive and bending strengths. On the other hand the abrasive resistance at the surface and at 1 cm depth turn to be very high, due to the hard and tough flint particles. The improvement was made by changing the aggregates to quarry dolomite (45 km haul) mixed with quarry basalt (250 km haul). The result was expressed by significant improvement in values and variability of compressive and bending strengths, on one side, but a decrease in abrasion resistance, especially at 1 cm depth, on the other side. The high values of abrasion resistance maintained in the surface layer were mainly due to the special quartz layer which was introduced during production. The solution which satisfied all physical criteria was a mixture combined of all four types of aggregates — crushed gravel, dolomite, flint, and basalt.

4. As for the abrasion resistance, the tests performed on the top surface of the blocks usually resulted with acceptable values, due to the thin quartz layer. On the other hand when dolomite and basalt were only used, values of abrasion measured at 1 cm depth usually ranged between 1.9 - 3.2 mm. However, it was found that the abrasion resistance of the entire block was usually improved with time. Repeated tests on identical samples performed three months after production (2 months after first testing) showed significant improvement down to acceptable values of abrasion resistance, as can be seen in Table 5.

Table 5. Comparison of abrasion results at 1 cm depth taken 1 and 3 months after production

Production date	Tests performed 28 days after production				Average Abrasion at 1 cm tested after 3 months (mm)
	Average Compres. Strength (kg/cm^2)	Average Bending Strength (kg/cm^2)	Average Abrasion at top (mm)	Average Abrasion at 1 cm (mm)	
10.3.83	765	79	1.6	2.5	1.8
"	779	77	1.4	2.8	1.7
14.3.83	717	91	1.7	2.4	1.8
"	748	78	1.8	2.4	1.9
15.3.83	767	90	1.9	2.2	1.9
"	763	84	1.7	2.3	1.9

As a consequence, daily lots of blocks that comply with all physical requirement but didn't pass the 1 cm depth abrasion requirement were tentatively approved pending the compliance of the abrasion resistance after late repeated testing. These lots were usually oriented to paved area with moderate abrasive loading.

9. CONSTRUCTION PROCEDURE

The following stages summarize the construction procedure of the concrete block pavement:

a. Construction of embankment and subgrade layers according to conventional flexible pavement specifications.

b. Casting of concrete edge beams on top of a layer of lean concrete, as shown in Figure 1. Minimum curing time for subsequent construction is 7 days.

c. Construction of subbase layers according to conventional flexible pavement specifications. (see Figure 2)

d. Spreading and leveling of the sand bedding layer (see Figure 3).

e. Laying of the blocks according to the pattern described in Figure 1, starting from the edge beam on one side and completing on the edge beam on the other side (see Figure 4). When necessary blocks were cut by a special device. The blocks were laid by hand with a maximum joint width of 3 mm.

f. Performing initial compaction on the same day by at least 3 passes of a vibrating plate with a dynamic force of 2000 kg. Figure 5 shows the pavement surface after the completion of initial compaction.

g. Filling of joints with quarry sand by intensive brooming and performing 4 additional



Figure 2: Construction of subbase layers.

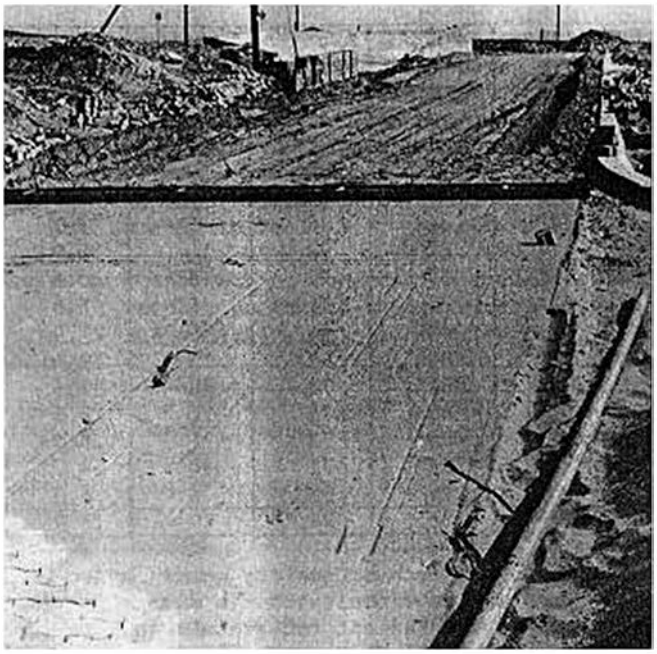

Figure 3: Spreading and leveling the sand bedding layer



Figure 4: Completion of blocks laying near edge beam.



Figure 5: Completed road section after initial compaction.

passes of vibrating plate compaction for completion of the initial compaction.

h. Performing heavy proof-rolling by 8 passes of a 12 ton pneumatic roller.

10. ACTUAL LOADING TEST

During the completion stages of one section of the project a loading test, using actual heavy caterpillar vehicle, was performed. It was mainly designed to check and verify some of

the assumptions and quality requirements applied for the concrete block pavement.

The test was performed on a pavement section which included a straight road and a storage area. The block pavement was completed with respect to joint filling and initial compaction, but without the final proof-rolling.

The test caterpillar vehicle weighed about 50 tons. Its chain pattern is described in Figure 6. The following operations were performed by the vehicle:

a. Fast and accelerated travelling in straight lines.

b. Abrupt stopping after fast travelling in straight lines including skidding with lock chains.

c. Turning 90° curves while travelling and after stopping.

d. Spot turning and manouvering while locking on side chains.

All the operations listed above were extensively performed many times. The following observations were made with relation to pavement performance and condition after the test:

a. During the entire test the pavement performed excellently as a stable monolithic surface. Not a single case of blocks deflection, block extrusion, horizontal blocks movement and breakage of entire block cross section, was observed.

b. Only minor breakage of edge corners of bolted blocks were observed as a result of straight travelling, turning and abrupt stopping and skidding.

c. Almost no abrasion was observed as a result of straight travelling, turning and abrupt stopping. On the contrary, metal traces were marked on the pavement surface as a result of the skidding after the abrupt stopping (see Figure 7).

d. Moderate amount of breakage of edges and corners of blocks, and several cases of surface abrasion were observed after extensive in-spot manouvering. This mainly occurred in bolted blocks (see Figure 8).

In general it was concluded that the entire pavement performed quite satisfactorily as a stable monolitic surface despite the heavy loading, and large horizontal forces, and extensive detrimental manouvering. The breakage of corners and edges of block were related in great part to bolted blocks. It should be stressed that the loading test was performed before the final proof rolling of the pavement, which should have "ironed" the pavement surface and thus eliminated a large part of the relative vertical unevenness of blocks.

Based on the outcome of the loading test it was decided to maintain all quality requirements and construction specifications as originally determined for the project and to reexamine them for other future projects during the first year of actual service operation.

11. SUMMARY AND CONCLUSIONS

This paper described an engineering project in which interlocking concrete block pavement was degiend and constructed for operating heavy caterpillar vehicles. The paper presented in details the different technical aspects and factors involved in this specific case and technology.

During the design, blocks production and pavement construction several problems were confronted with. The successful solution of problems as related to blocks production, quality control at construction, together with a successful pavement performance in actual loading test, permits this introduction of the suggested quality criteria, testing procedures and construction specifications.

The specific project described in the paper is now in its last construction stages, and will be open soon to actual service. During the first year of operation a systematic qualitative and quantitative monitoring of pavement performance and its related factors will be performed. The feedback and analysis of the findings will be used in the future design and construction of new interlocking concrete block pavements.

ACKNOWLEDGEMENT

The authors wish to acknowledge the following persons who participated in the design, production, construction and supervision phases of the project and who contributed to its success: R. Pinchasi, R. Ziv, S. Amit, Y. Bar, and N. Ezra from MOD Center of Building and Construction; M. Bogomilski - Civil Engineering; D. Gruner from D.E.L. - Development and Engineering Ltd.; M. Assa from MOD Building and Construction - Southern Section; S. Tubul from the Standards Institute of Israel - Southern Office; G. Akerstein and M. Milstein from Zvi Akerstein - Cement Products Ltd.

REFERENCES

(1) Mavin, K.C. "The Interlocking Concrete Block Pavement", Australian Road Research, Vol. B, No. 3, 1978.

(2) Lilley, A.A. and B.J. Walker, "Concrete Block Paving for Heavily Trafficked Roads and Paved Areas", Cement and Concrete Association, 1978.

(3) Simmons, M.J., "Construction in Interlocking Concrete Block Pavements", Australian Road Research Board, ARR No. 90, ISSN 0313-3842, 1978.

(4) Shackel, B., "The Design Interlocking Concrete Block Pavements," Australian Road Research, Vol. 8, No. 3, 1978.

(5) Israeli MOD Center of Building and Construction, Research and Development Branch, Roads Section. "Interlocking Concrete Block Paving-Survey and Design Guide lines", December 1979.

(6) Livneh, M. "Report on Interlocking Concrete Block Pavements", Prepared for Israeli New Airports Project Management, August 1981.

(7) Livneh, M. Ishai, I. and Uzan, J. "Chapters in the Design of Flexible Pavements" Publication No. 32, Transportation Research Institute, Technion, Haifa, 1976.

(8) Ishai, I. "Quality Control for Production of Interlocking Concrete Blocks for Caterpillar Loading Areas", C.I. Transportation Engineers Consultants, Report No. 18/82, July 1982 (Prepared for Israeli MOD Center of Building and Construction, Road Section).



Figure 7: Metal marks on the pavement surface after skidding

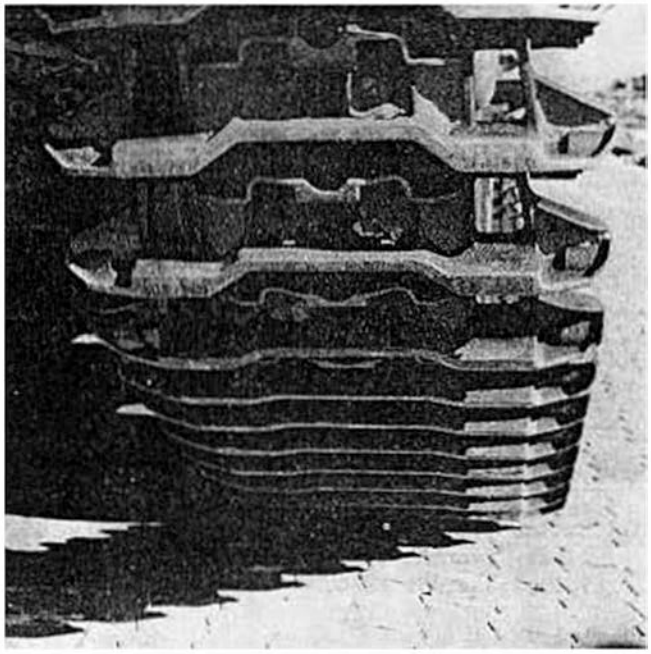

Figure 6: Chain pattern of the test caterpillar vehicle



Figure 8: Corners and edges breakage of blocks