CONSIDERATIONS ON THE CHOICE OF CONCRETE BLOCK PAVING AT MASSEY COAL TERMINAL, NEWPORT NEWS, VIRGINIA

Gerald R. Brunstrom

Vice President and Project Director
Massey Coal Terminal Corporation
Richmond, Virginia, U.S.A.

SUMMARY

Massey Coal Terminal is a new computer controlled transshipment facility incorporating ground storage of coal. The 29-acre coal yard includes two parallel stacking conveyor systems that can place into storage up to 1.4 million short tons of coal in as many as 12 separate 100-foot high stockpiles. Coal is reclaimed from storage utilizing mobile equipment and an underground conveyor system.

One of the keys to successful operation of Massey Coal Terminal is to have the capability to reclaim substantially all coal from ground storage without contamination. And, further, to be able to clean out a stockpile containing one type of coal so that another type or quality can be stored without contamination. These and other requirements meant that the coal yard surface not only had to provide a barrier between the coal and the earth, it had to provide a working surface for heavy mobile equipment.

Nine alternative pavements were evaluated against the requirements of Massey Coal Terminal. Aided with this analysis Massey concluded that interlocking concrete block pavers laid over a soil cement subbase would best meet the requirements.

During late 1982 and early 1983 about 600,000 square feet of interlocking concrete block pavement were installed. The remaining 700,000 square feet is paved with the soil cement subbase only. A final decision to pave the remaining area with concrete block pavers will be made after evaluating performance during the next two years.

Performance of the concrete block pavement during the first nine months of operation has met Massey's expectations.



Figure 1. Reclaiming coal from a stockpile on concrete block pavement.

1. DESCRIPTION OF TERMINAL

Massey Coal Terminal is located in the Port of Hampton Roads at Pier 9, Newport News, Virginia, Marine Terminal. This new computer-controlled unloading, ground storage, and loading facility is a major upgrading in terminal logistics. No longer are sellers, shippers and buyers of coal solely reliant on the direct transfer of coal from railcar to ships.

Massey started constructing the US$122 million facility in April 1981 and placed it in operation in December 1982 -- a period of less than 20 months. Existing Pier 9 was upgraded substantially to accommodate a new 8000 ton per hour shiploader capable of loading ships up to 175,000 dwt in size. Operating depths of the two berths were increased to 45 ft. at the upstream berth and 47 ft. at the downstream berth.

A new 29-acre coal yard was constructed with two parallel stacking conveyor systems 135 ft. high to place into storage up to 1.4 million short tons of coal in as many as 12 separate stockpiles. Coal is drawn from the ground storage by an underground transfer system in the blends required. It moves by conveyor out to the pier where a range of vessel sizes from barges to huge ocean vessels can be loaded at either side of the pier. The annual throughput capacity of the terminal is rated at 12 million short tons per year. See Figure 1.

The coal yard is encircled by a 4-track loop which can accommodate up to three 100-car trains and a string of 100 empties. Coal is dumped in a tandem rotary car dumper and placed into ground storage at rates up to 5,000 short tons per hour.

Ground storage of coal is the single most important feature of the Massey Coal Terminal. This is because it acts as a buffer between railroad operations and ship operations -- allowing each to operate fairly independently. A shipload of coal can be accumulated in advance of the vessel's arrival and then loaded rapidly with the high capacity shiploading system. For the mines, it means that production can be levelled because of the capability to ship coal well in advance of a ship's arrival and place it into a stockpile. Railcar demurrages are virtually eliminated.

However, ground storage of coal presented problems to be solved such as elimination of contamination from the earth, provision for reclaiming of substantially all coal placed on the ground, and provision for cleanup of one type or quality of coal to allow another coal to be stockpiled in its place -- again without contamination. This meant, first, that some type of barrier between the earth and coal had to be constructed. Second, the barrier had to be able to withstand not only the loads imposed by the coal stockpiles, but also loads from mobile equipment used in the coal yard operation.

2. CHOICE OF CONCRETE BLOCK PAVERS

The key to successful operation of the Massey Coal Terminal is to be able to unload coal from trains, place the coal in ground storage, reclaim the coal from stockpiles, and load it on ships -- all with neither contaminating the coal nor losing significant amounts of coal, and, of course, at a cost that is competitive with loading coal on ships directly from railcars.

Massey's decision to construct a ground storage coal transshipment facility presented the problem of how to surface the coal yard. The major cost of coal has already been incurred when the coal arrives at Massey Coal Terminal -- namely, mining, preparation, and rail transportation. It is thus important that substantially all of the coal that arrives at the terminal and is placed in ground storage is reclaimed and loaded on a vessel.

Selection of a surface for the coal yard involved consideration of many factors. Probably the most important single factor for Massey was to have the capability to separate the coal from the earth to prevent contamination and/or loss of coal and yet allow economical reclaiming and cleanup of the coal stockpile.

The decision to utilize underground reclaim conveyors as opposed to bucket wheel stacker-reclaimers meant that mobile equipment would be required. This equipment would be utilized a) to move the coal from the point of deposit from the overhead conveyors to the outlying areas of the stockpile, and b) to move the coal back to the reclaim hoppers which are located directly under the overhead conveyors. The mobile equipment fleet consists of a combination of tracked dozers and wheel loaders -- tracked dozers for operation primarily on the coal piles and wheel loaders for operation primarily on the yard surface to clean up coal. See Figure 1.

The use of mobile equipment, in turn, meant that the coal yard surfacing would not only have to provide a barrier between the coal and earth, it would have to sustain heavy wheel loads. It would also have to allow tracked dozers to occasionally traverse the coal yard for maintenance, refueling and transferring between stockpiles.

An analysis summary of the major factors considered in selecting interlocking concrete block pavers over eight alternatives is shown in Table 1. This analysis was useful, but in the end it was Massey's judgment that the pavers would do the best job. At present, 600,000 square feet out of a total 1.3 million square feet of yard area are paved with interlocking concrete block pavers over a soil cement base as shown in Figure 2. The balance, or 700,000 square feet, are paved with soil cement only as shown in Figure 4. Pavers were used in the section of the coal yard where turnover of coal stockpiles and changes from one type coal to another will be greatest. Based upon the relative performance of soil cement only versus concrete pavers over soil cement, a decision will be made in the next year or two whether or not to install pavers over the entire coal yard.

3. PREPARATION OF THE COAL YARD

3.1 Soils Condition and Improvement

As is true with most tidewater locations, the Massey Coal Terminal site is underlain

Table No. 1 - SUMMARY ANALYSIS OF PAVEMENT ALTERNATIVES

Factors Considered \ Type of Pavement	1	2	3	4	5	6	7	8	9
Cost per Square Foot - $U.S.	2.13	2.40	0.61	3.32	1.53	1.40	1.17	2.03	2.38
Prevent Contamination	Excel	Excel	Excel	Excel*	Excel	Fair	Poor	Poor	Poor
Allows Cleanup of Coal	Excel	Excel	V. Good	Excel*	Excel	Fair	Poor	Poor	Poor
Ability to Adjust to Differential Settlement	Excel	Excel	Fair	Poor	Fair	Good	Good	Good	Good
Ability to Carry Heavy Wheel Loads	Excel	V. Good	Good	Excel	Good	Good	Good	Fair	Fair
Resistance to Track & Dozers	V.Good	Good	Poor	Good	Poor	Good	Good	Good	Good
Gen'l Resistance to Breaking up and Contaminating Coal	Excel	V. Good	Good	Fair	Fair	Good	Poor	Poor	Poor
Impermeability	Excel	Excel	Good	Excel*	Excel	Poor	Poor	Poor	Poor
Ease of Repair	Excel	Excel	Fair	Poor	Good	Excel	Excel	Excel	Excel
Resistance to Acid Water	V. Good	V. Good	Good	Good	Good	Good	Good	Good	Good
Surface Drainage/ Runoff	Excel	V. Good	Excel	Excel	Excel	Fair	Poor	Poor	Poor
Weather Durability	Excel	Excel	V. Good	V. Good	V. Good	Fair	Fair	Fair	Fair
Expected Life (yrs.)	20-25	15-20	10-15	20-25*	10-15	10-15	10-15	10-15	10-15

* If significant differential settlement does not occur. If it does, rating is Poor.

LEGEND FOR PAVEMENT TYPES

1. Interlocking Concrete Block Pavers over Soil Cement (Figure 2).
2. Interlocking Concrete Block Pavers over Crushed Stone (Figure 3).
3. Soil Cement Only (Figure 4).
4. Reinforced Concrete (Figure 5).
5. Bituminous Concrete over Crushed Stone (Figure 6).
6. Crushed Limestone (Figure 7).
7. Crusher Run Stone (Figure 8).
8. Middling Coal (Figure 8).
9. Marketable Coal (Figure 8).

Abbreviations:

Excel - Excellent
V. Good - Very Good

with fine sand, silt and clay deposits with high moisture content -- highly susceptible to large settlements under load. In order to overcome this deficiency so that coal could be stockpiled to 100-foot heights, this material, approximately 30 feet in thickness, had to be either consolidated or removed and replaced with good material. The remove and replace option was discarded as being cost prohibitive. Another alternative, but also cost prohibitive in this case, was to construct a pile supported mat. This left consolidation as the only viable course of action for Massey.

Surcharging was considered, but dismissed because of the extensive time involved to achieve the desired consolidation. The method finally selected is called Dynamic Consolidation performed by Menard-ECI. This method in-

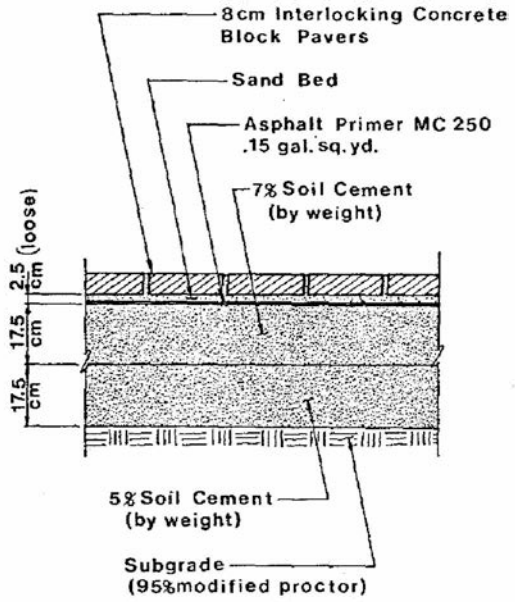

CROSS-SECTION
CONCRETE BLOCK PAVEMENT

Fig. 2

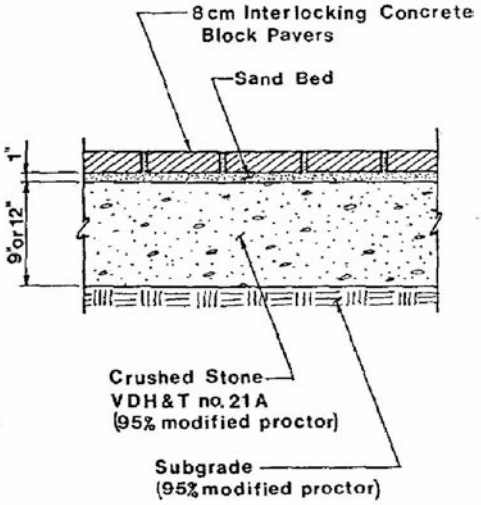

CROSS SECTION
CONCRETE BLOCK &
CRUSHED STONE PAVEMENT

Fig. 3

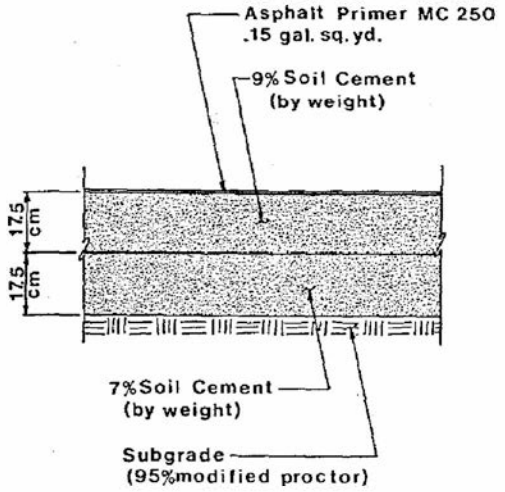

CROSS-SECTION
SOIL CEMENT PAVEMENT

Fig. 4

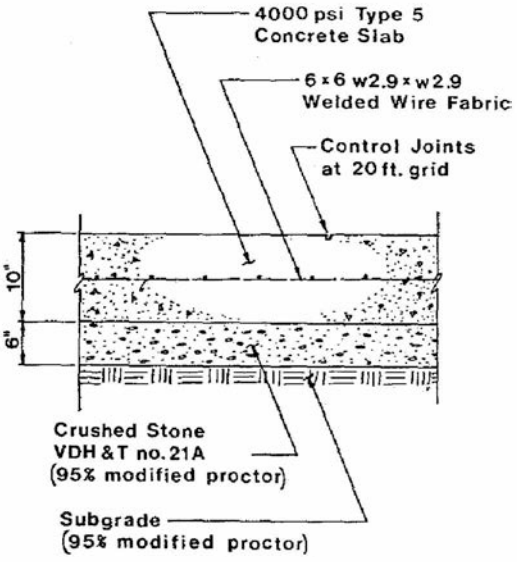

CROSS SECTION
REINFORCED CONCRETE PAVEMENT

Fig. 5

volves dropping 16 and 18 metric ton concrete blocks or pounders from a height of 85 feet in an approximate 40-foot grid pattern across the yard. The dimensions of the grid, the weight of the pounder, the height from which the pounder is dropped, and the number of drops was determined by Menard-ECI engineers from the results of continuous soil testing throughout the dynamic consolidation process. A final ironing of the site was accomplished using a 12 metric ton pounder and a drop height of 35 feet. A single drop at very close spacing helped consolidate the top several feel of the site. Massey employed an independent soils testing laboratory to confirm the results presented by Menard-ECI (1).

Even with an intensive soil consolidation program, settlements of up to 30 inches were forecast under long term loads from the 100-foot high stockpiles. Since the coal yard will not be uniformly loaded at any given time, a differential settlement of 30 inches in 200

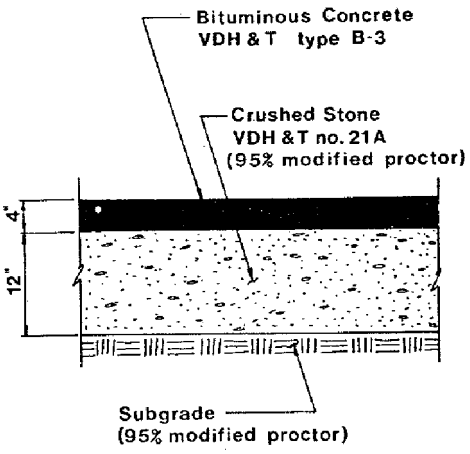

CROSS SECTION
BITUMINOUS CONCRETE PAVEMENT

Fig. 6

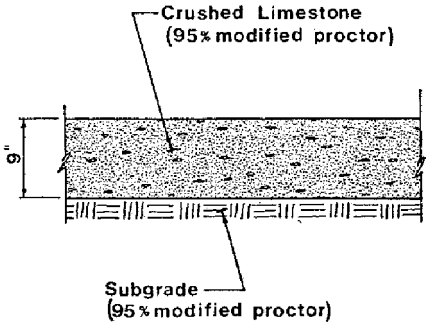

CROSS SECTION
CRUSHED LIMESTONE PAVEMENT

Fig. 7

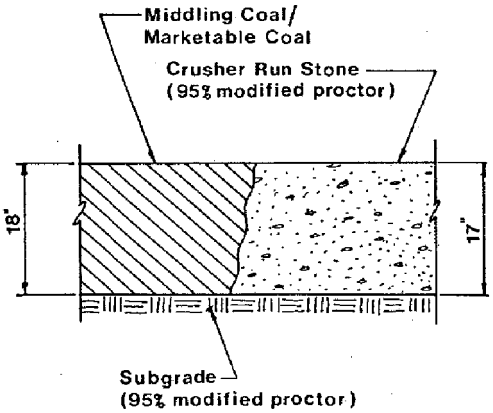

CROSS SECTION
COAL OR CRUSHED STONE PAVEMENT

Fig. 8

feet was projected along the central portion of the tunnels for the intermediate term and at each end of the tunnels for the long term. Therefore, the pavement for the coal must be able to accommodate this differential settlement while maintaining the structural integrity. Any breakup of the pavement would mean almost certain contamination of the coal and a subsequent loss of value of the coal. The capability to handle differential settlement was, as mentioned previously, one of the priority considerations in selecting a pavement utilizing interlocking concrete block pavers.

3.2 Pavement Design

The interlocking concrete block pavement and the soil cement pavement were designed by Dr. B. Shackel of Unisearch Limited. (2, 3, 4) Construction guide specifications were also prepared by Dr. Shackel for adaption in the United States.

The final design pavement using interlocking concrete block pavers is shown in Figure 2. This design is based on the soil conditions at Massey Coal Terminal and a wheel load of 20 short tons with 120 pounds per square inch tire pressure. A combination of 8 cm thick pavers and a soil cement subbase thickness of 14 inches was selected to accommodate the maximum loading. Due to equipment availability in the Newport News area, the design was modified so that construction could be carried out in two layers of 7 inches each.

For the soil cement only pavement shown in Figure 4, the cement content was increased by 2%. This pavement design was intended for an intermediate period with the intention by the designer that interlocking block pavers would be installed at a later date. This possibility still exists, but the final decision will be based on actual performance over 12 to 24 months.

3.3 Pavement Materials

3.3.1 Soil Cement Subbase

The soil cement subbase is comprised of soil material that existed on site, some approved imported material in certain areas, and Type I cement complying with ASTM Specification C150-81.

After treatment with cement, the subbase was required to exhibit the following physical properties:

Strength

a. Northern end of site (beneath area to be paved with blocks during 1982/83)

Upper 7" subbase	3.0 MPa	(435 psi)
Lower 7" subbase	2.0 MPa	(290 psi)

b. Southern end of site

Upper 7" subbase	4.0 MPa	(580 psi)
Lower 7" subbase	3.0 MPa	(435 psi)

Plasticity

After treatment the soil shall have a plasticity index not greater than 6%.

3.3.2 Interlocking Concrete Block Pavers

The concrete block pavers were specified to comprise dentated units which key into each other on all four vertical faces and which, by their plan geometry when keyed together, resist the spread of joints parallel to the longitudinal and transverse axes of the units. The shape selected is similar to the more commonly known "Unistone" unit. The nominal block dimensions are 112.5 mm wide by 227 mm long by 80 mm thick.

Other physical properties include:

Compressive Strength

At the end of delivery to the work site the average compressive strength of test samples was not permitted to be less than 55 MPa (8,000 psi) with no individual unit less than 50 MPa (7,200 psi) when tested in accordance with ASTM method C140.

Appearance

All units were required to be sound and free from major cracks or other defects which would interfere with proper placing or impair the strength with proper construction.

Water Absorption

The average absorption of the test samples was not permitted to be greater than 5% with no individual unit greater than 7% as required by ASTM method C140.

Resistance to Freezing and Thawing

The manufacturer was required to demonstrate that the paving units had adequate resistance to freezing and thawing encountered in the Newport News area.

Abrasion Resistance

When tested in accordance with ASTM method CA18, specimens were not permitted to have a greater volume loss than 15 cubic centimeters per 50 square centimeters. The average thickness loss could not exceed 3 mm.

3.4 Pavement Construction

Laying of the interlocking concrete block pavers started on 26 October 1982 when a sufficient area of soil cement subbase had been completed to allow laying to proceed without interruption. The combination of warped surfaces for drainage and an irregular boundary presented problems in block alignment initially. But, after some experimentation, a laying pattern was established to overcome further alignment problems.

The total area of interlocking concrete block pavement is about 600,000 square feet. The pavement area is about 1,000 feet in length and the width varies from 400 feet to 700 feet. Block paver laying was completed on 9 February 1983, a period of three and one-half months that included the Thanksgiving and Christmas holidays and, of course, winter weather.

Once laying operations opened up, a crew of 20 men was used for installation of the block pavers. The makeup of the crew was:

- 1 forklift operator, truck driver, rough spread sand topping
- 1 block fit adjuster
- 2 block cutters
- 10 full time block layers
- 6 part time block layers
  - a) move stacks to laying face (1 full time in large area)
  - b) plate vibrator
  - c) spread bedding sand and chalk
  - d) sweep topping sand

Laying rates based on the total crew size ranged from a low of 49.2 square feet per man hour to a high of 67.6 square feet per man hour. These rates are the computed average over a one week period. In other words, the poorest week averaged 49.2 square feet per man hour and the best week 67.6 square feet per man hour.

Typical scenes of block laying operations are shown in Figures 9, 10, 11, 12, 13, 14 and 15.

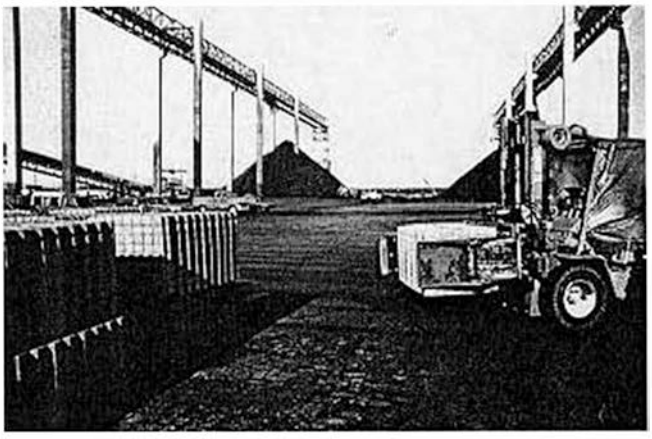

Figure 9. Forklift with clamping device transferring a cube of blocks

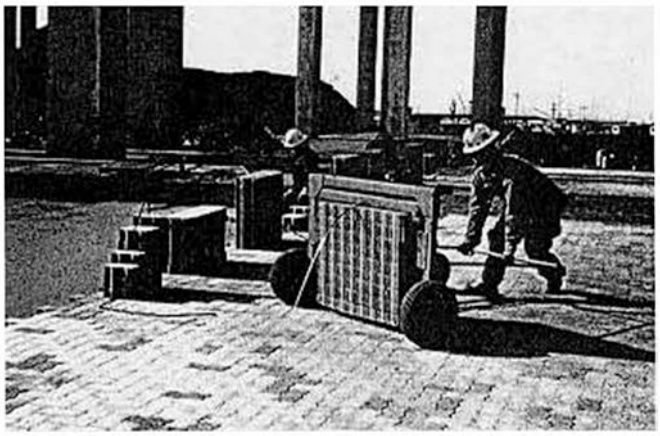

Figure 10. Delivering a row of blocks to the laying face.

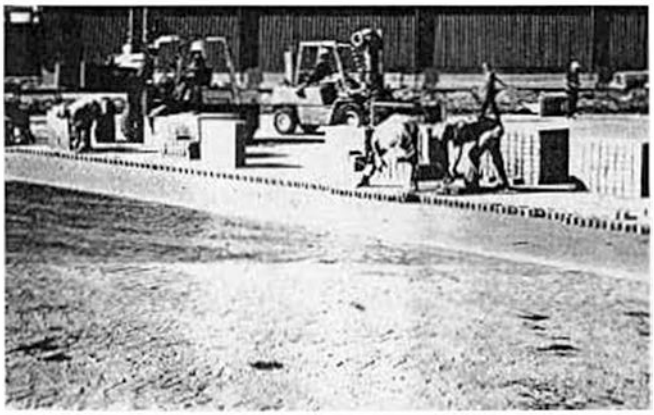

Figure 11. Block laying in progress.



Figure 12. View of block laying from overhead stacking conveyor.

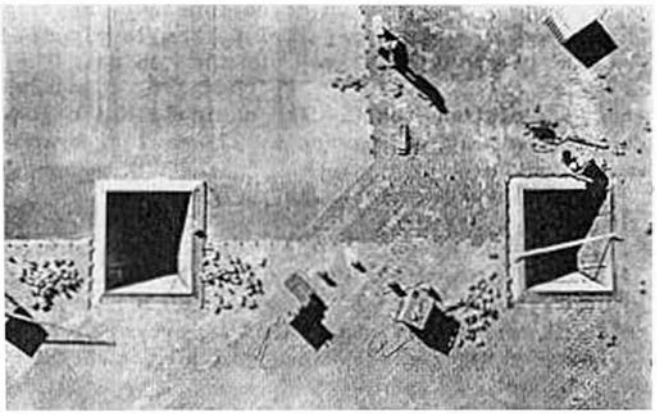

Figure 13. Overhead view of block laying at coal reclaim hoppers.

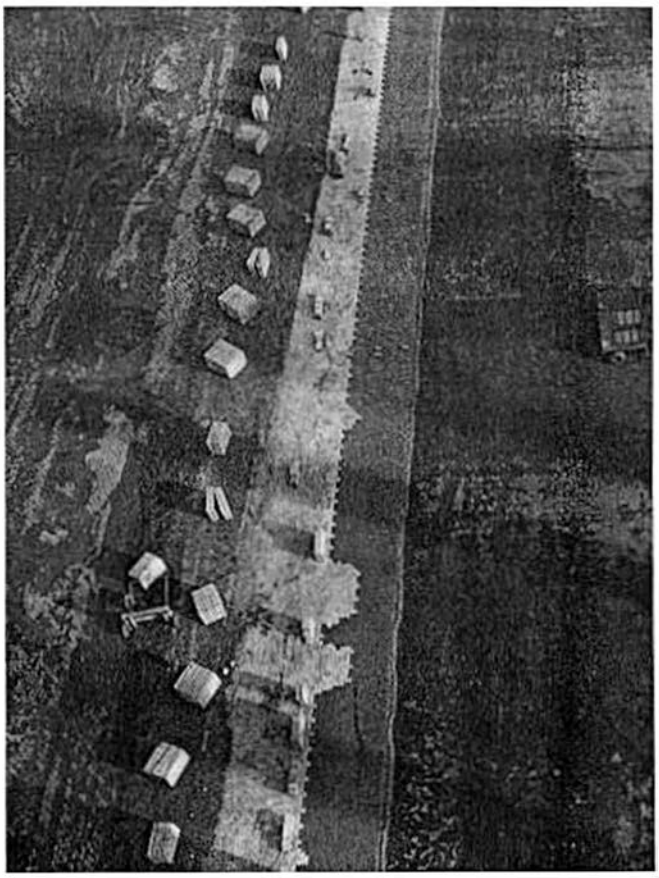

Figure 14. Overhead view of laying face.

4. EVALUATION OF PERFORMANCE OF PAVEMENT

The performance of the interlocking concrete block pavement during the first nine months of operation of Massey Coal Terminal has met all expectations.

When reclaiming coal for the second shipment, one of the large tracked dozers hit the pavement with a corner of its blade coming down off the coal pile. Several blocks were dislodged and others were gouged, but considering the force of the impact, the damage was minimal. The paving units were readily replaced and the pavement was placed back into operation with minimum downtime. The dozer operator was given additional training and since then no further damage of this type has occurred.

One thing Massey operating personnel have learned is that they cannot start up the overhead stacking conveyors when they are filled with water unless the discharge end is over a coal pile. When the water was dumped from the 100-foot high conveyors directly onto the concrete block pavers several units were dislodged by the cascading water. This happened twice before the operators figured out what was happening. However, again little time was lost because the pavers were easily reinstalled.

Massey's intent is to continue monitoring the performance of the concrete block pavement as settlement of the coal yard takes place. However, at this writing, there is no reason to believe that the concrete block pavers will not perform as anticipated.

5. REFERENCES

(1) MENARD-ECI Report of Foundation Preparation Using the Dynamic Consolidation Process, Massey Coal Facility, Newport News, Virginia. Project No. MEC-81-001, December, 1981

(2) SHACKEL, B. Report on The Design of Heavy Duty Interlocking Concrete Block Pavements for the Massey Coal Terminal, Newport News, Virginia. Unisearch Limited Report No. 1, June 1982.

(3) SHACKEL, B. Report on Model Specifications for Interlocking Concrete Block Pavements for the Massey Coal Terminal, Newport News, Virginia. Unisearch Limited Report No. 2, June 1982.

(4) Report on Final Recommendations for the Design and Construction of Block Pavements for the Massey Coal Terminal, Newport News, Virginia. Unisearch Limited Report No. 3, August 1982.



Figure 15. View of coal yard with concrete block pavement.