DESIGN, CONSTRUCTION AND PERFORMANCE OF TEST PAVEMENTS AT THE PORT OF MONTREAL

*J. Hode Keyser and L.A. McCoomb **

*École Polytechnique of Montreal Transport Canada Development **

SUMMARY
Six sections of test pavement have been built in the Port of Montreal to evaluate, under canadian conditions, the effects of the following factors on pavement performance: pavement types (block vs asphalt); type of base under concrete blocks (cement-treated vs granular); and block thickness (80 mm vs 100 mm). A brief description of the design, the construction and the economic analysis of each pavement section is given in the article as well as a description and the results of a monitoring program which has been designed to assess the condition of pavement component layers and soil, and the degradation of the pavement with time.
The article report on the results obtained to date: the change in structural characteristics during construction; the effects of compaction of block pavement with a 30 t rubber-tyre roller; the change in thermal and moisture conditions; the change in structural behavior and the degradation of pavement.

INTRODUCTION

Interlocking paving blocks were introduced in Canada in the early 70's. Since then their use has increased rapidly, especially during the last six years. This is shown dramatically by the example given in figure 1.

FIGURE 1
DEVELOPMENT OF A BLOCK INDUSTRY IN MONTREAL

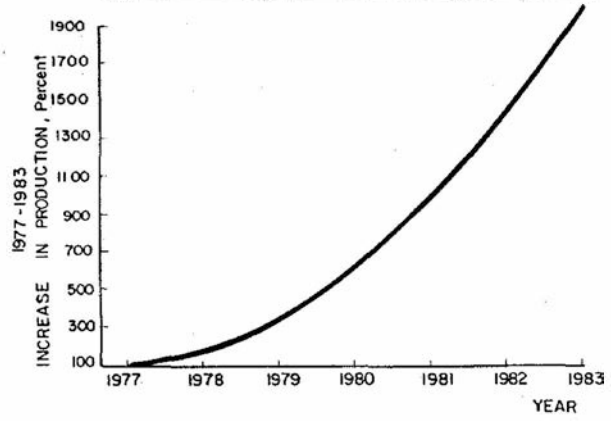

Until recently, no scientific investigation of block pavement performance had been undertaken in Canada. The Canadian Standards Association does not even have a standard to define the quality of paving blocks. Canadian design specifications and construction methods for block pavement are therefore based on European and Australian experiences.
The first full-scale Canadian tests of block pavements of any significance were begun in 1981 at the Port of Montreal, the project sponsor, by the Transportation Developement Center of Transport Canada. The tests were carried out by the Construction and Control Research Center (C.R.C.A.C. Inc.).
This article describes the design, the construction and the performance of full-scale test pavements at the Port of Montreal.

1. OBJECTIVE

The primary long-term objective of the project is to compare the performance of concrete block pavement with conventional flexible pavements in a container port area under canadian conditions. This project was judged worthwile since many problems are associated with the flexible pavements of port areas and it was thought these might be solved by the use of block pavements. For example: identation of container legs into an asphalt pavement surface might be eliminated by using block pavements which are presumed resistant to punching and can accomodate higher deflection.
The softening of asphalt due to fuel and oil spillages will cause plastic deformation and slick surfaces. These can be eliminated by using concrete blocks which are not sensitive to these materials.
Bitumen is an expensive imported material in eastern Canada. Interlocking blocks can be mass-produced and laid by hand by relatively unskilled labour.

2. DESCRIPTION OF TEST SITES AND TEST PAVEMENTS

Two test sites at the Port of Montreal have been chosen. The main site, comprising five sections of test pavement, is located at the Racine Terminal. The other site, with only one test section, is located at the Task Terminal.
The five sections at the Racine Terminal have been chosen to test the effects on pavement performance of pavement types (block vs asphalt), type of base under concrete blocks (cement-treated vs granular) and block thickness (80 mm vs 100 mm).
The pavement will be subjected to normal container traffic and operation: stacking of containers, and circulation of rubber-tyre

container-stacking gantries, fork-lifts, crawler cranes, and heavy trucks.
The section at Task Terminal will serve to evaluate the performance of concrete block pavement under crawler crane operations.

3. DESIGN OF TEST SECTIONS

The flexible pavement sections, which are either surfaced with asphalt or concrete block, have been designed by the USCE Method for Flexible Pavement and Heavy Loads and the rigid-base block pavements have been designed by the PCA Method .
All the pavement sections at the Racine Terminal rest on dredged sand covered by a one metre thick platform of fragmented rock mixed with the sand by dynamic compaction. The dredged sand has a low bearing capacity with a soak CBR value of only 2%. Cross section of each test pavement is illustrated in figures 2a, 2b, 2c and 2d.

FIGURE 2a

SECTION A and B RACINE TERMINAL

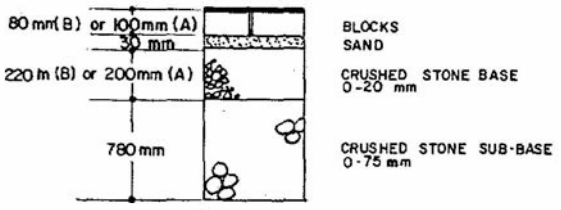

FIGURE 2c

SECTION D & E RACINE THERMINAL

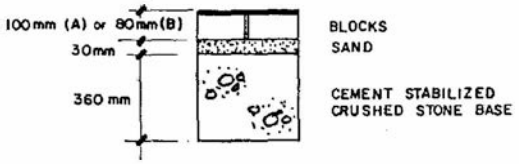

The five pavement sections at Racine Terminal have been intentionally over-designed to compensate for the unknown effect of winter-weather and to ensure an acceptable performance. The test pavement at Task Terminal differs from those at Racine as it is built over an old pavement sub-base consolidated by dynamic compaction.

4. ECONOMIC ANALYSIS

A computer program has been developed to compare the cost of each pavement section and to determine the influence of the rates of interest and inflation on the cost of each solution. Since the benefits of each type of new pavement are difficult to evaluate, the program assumes that the direct and indirect benefits of all solutions are equal and takes into account the following costs: initial cost of construction, cost of rehabilitation, annual maintenance cost, salvage value.
By comparing the results of the economic analyses of the five pavement sections at the Racine Terminal, it is obvious that the cost of asphalt pavement is the lowest, even if the rehabilitation and maintenance costs of block pavements are low. This is mainly due to the very high initial cost of block pavement.
However, block pavement will become more competitive if the price of bitumen increases and as the initial cost of block pavement decreases. Also block pavement may be preferred when its advantages can compensate for the additional cost.

FIGURE 2b

SECTION C RACINE TERMINAL

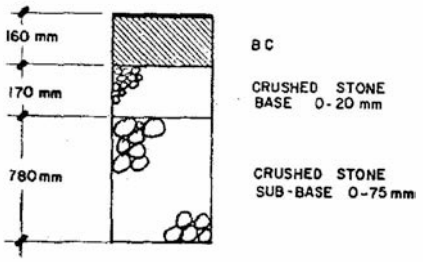

FIGURE 2d

TERMINAL TASK

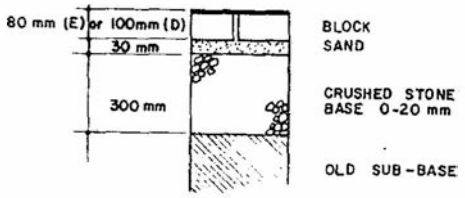

5. CHARACTERISTICS OF PAVING MATERIALS

A summary of the characteristics of bituminous mixtures and the 0-20 mm and 0-75 mm crushed limestone base and sub-base materials is given in Table 1. These materials conform to normally specified by the Quebec Ministry of Transport and are commonly used in the Montreal region for construction of urban and rural roads.

Table 1: Characteristics of bituminous concrete and granular base and sub-base

Crushed Limestone		
Grading	0-20 mm	0-75 mm
Density-kg/m^3	2228	2300
Water content-%	5.5	4.6
CBR-%	48-70	-

Table 1 (continued)

Bituminous mixture	Surface	Base	Foundation
Grading	0-12.5	0-12.5	0-25
Bitumen content-%	5.0	5.0	4.0
Voids content-%	3.7	3.1	5.0
Stability-MPa	9.2	11.5	11.4
Flow-(mm)	2.5	3.3	3.5
Thickness-(mm)	48	79	52
Degree of compaction-%	91.6	96.9	94.7

The characteristics of the cement-stabilized crushed limestone base of sections D and E are summarized here after:

. Compressive Strength: 34 to 42 MPa,
. Unit Weight: 2400 kg/m^3, with a standard deviation of 25 kg/m^3
. Water Content, during compaction: 4,9%, with a standard deviation of 0,2%,
. Degree of Compaction: 98,9%, with a standard deviation of 1,1%.

A good coarse angular sand, with less than 2% particles passing the 200 sieve (75 µm) was used as the bedding sand. The unit weight of this sand was approximately 1800 kg/m^3, and its CBR value was above 20%.

An average thickness of 30 mm for the compacted sand layer has been specified because of rutting and normal variation during construction.

Unipave blocks have been selected, based on Australian studies, since they interlock on all four sides of the block and can be laid in herringbone pattern. The specified characteristics of the paving blocks are summarized in Table 2.

Table 2: Characteristics of paving blocks

Minimum compressive strength	50MPa
Weight loss, after 1000 freeze-thaw cycles	Nil
Maximum absorption, %	5
Permissible variation in dimensions	
Length	±2mm
Width	±2mm
Height	±3mm

Block thicknesses of 80 mm and 100 mm have been specified because of the exceptionally high wheel loads, which can reach 45 tonnes.

6. MONITORING PROGRAM

A monitoring program has been designed to assess:

a) The condition of pavement component layers and soil. That is:
   . mechanical properties of each layer in terms of Dynamic Modulus,
   . moisture conditions,
   . thermal conditions,
   . frost penetration.
b) Degradation with time, if any, of:
   . load bearing capacity;
   . surface deformation,
   . cracking and spalling of the concrete blocks,
   . scaling of the concrete blocks.

The mechanical properties of each component layer and the change in pavement response to load with time have been measured using Dynaflect. Both maximum surface deflection and deflection bowl shape have been recorded. The change in moisture condition has been measured by a neutron probe capable of measuring the humidity of a sphere, around an aluminum access tube, in pounds of water per cubic foot (figure 3a).

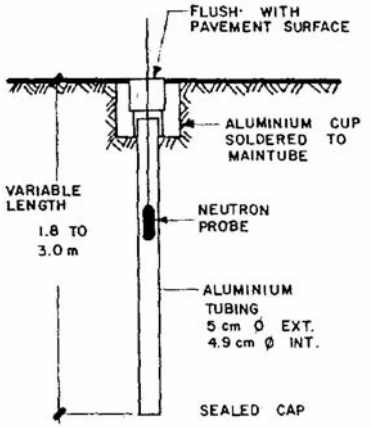

FIGURE 3 a
ACCESS TUBE FOR NEUTRON PROBLE

The variation in thermal conditions has been measured by inserting thermocouples at depth of 5, 10, 20, 40, 80 and 160 cm (figure 3b).

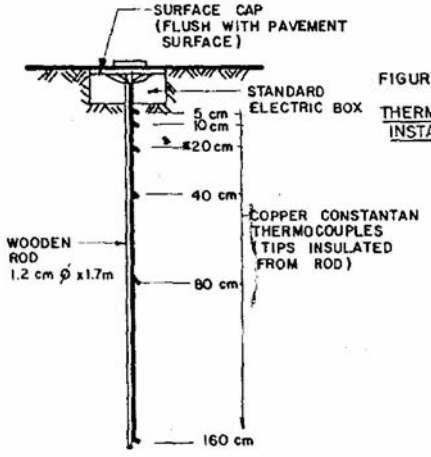

FIGURE 3 b
THERMOCOUPLE INSTALLATION

The frost penetration has been measured periodically during two consecutive winters. Three Gandhal tubes have been installed in test sections A, C and D of the Racine Terminal. These are pavements of blocks on granular base, asphalt concrete on granular base and blocks on cement-stabilized granular base (figure 3c). The deformation and rutting of the surface have been monitored with a straight edge. The cracking and spalling of concrete blocks have been monitored by periodic counting of broken and/or scaled blocks.

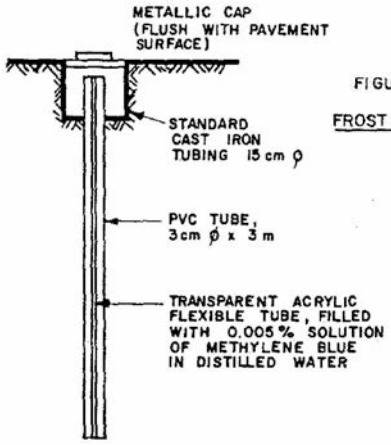

FIGURE 3c
FROST TUBE INSTALLATION

7. CHANGE IN STRUCTURAL CHARACTERISTICS DURING CONSTRUCTION

The pavement was built in the summer of 1981. The construction was closely controlled by a private firm so that the material used and the laying conformed in all respects to specification requirements.

Special attention has been given to the compaction of each layer, starting from the dynamic compaction of the sand and crushed stone mixture to the proof-rolling of the block pavement with a 30-tonne rubber-tyred roller.

The structural capacity of each layer has been evaluated during construction by Dynaflect deflection measurements. Dynaflect was selected because it is fast, easy to move and also because the technicians had accumulated eight years of experience in the use of this particular equipment.

A sufficient number of tests have been made on each layer enabling assessment of the central tendency and the normal dispersion of the results.

The variation in Dynamic Moculi of different layers is represented by a serie of cumulative frequency curves (figure 4). It clearly illustrates that the paving materials are heterogeneous and that characteristics, such as Dynamic Modulus, vary with the degree of heterogeneity and the quality of construction.

FIGURE 4
CUMULATIVE FREQUENCY CURVES ILLUSTRATING VARIATION OF DYNAMIC MODULUS OF DIFFERENT PAVING MATERIALS

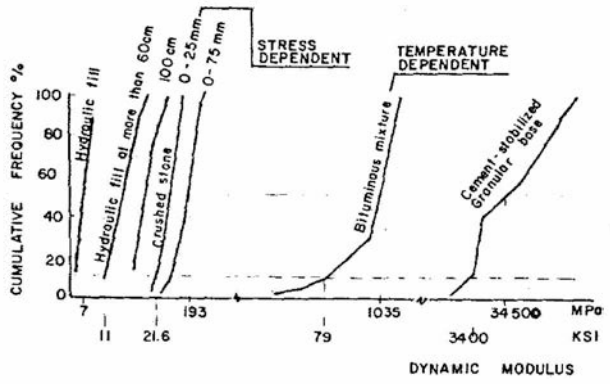

Typical average values of Dynamic Moduli of materials tested are:

34500 MPa for cement-stabilized granular base,
3450 MPa for block pavement on cement-stabilized granular base,
1035 MPa for bituminous mixture at 30°C,
193 MPa for crushed stone, 0-75 mm,
172 MPa for crushed stone, 0-25 mm,
48 MPa for hydraulic fill.

The gain in pavement strength during construction is well illustrated by the decrease in maximum deflection at each layer. The deflection, which is:

1.8 mils on the dredging sand, decreased to
1.0 mils after mixing with fragmented rock, and to
0.8 and 0.75 mils by adding a layer of 0-75 mm crushed stone and an additional layer of 0-20 mm crushed stone, and finally to
0.6 mils with the laying of 15 cm of bituminous mixture.

When 36 cm of cement-stabilized base is laid on top of 0-75 mm crushed stone, the maximum deflection decreases to 0.2 mils. The addition of paving blocks on either a 0-20 mm foundation layer or on a cement-stabilized base has the effect of increasing the deflection by about 0.1 mils in both cases.

The load spreading capability of the structure under Dynaflect loading conditions has been evaluated as pavement layers were added: the spreadability of dredging soil is 41 per cent, it increases to 52 after dynamic compaction and laying of 9075 mm size crushed stone, spreadability increases rapidly and approaches 90 per cent with a concrete base but the addition of bedding sand and paving blocks has the effect of reducing it to 60 per cent, in the case of block pavement on a granular base, the addition of the 0-20 mm crushed stone on top of the 0-75 mm crushed stone sub-base the effect of

decreasing the SI from 50 to 43 per cent; and the addition of bedding sand and paving blocks decreases it further to less than 40 per cent. The average deflections of different types of pavement under Dynaflect loading is illustrated in figure 5. It is interesting to note: that a block pavement on granular base has the highest maximum deflection and the greatest punching effect (S_1-S_2); that the deflection results of Sensors No. 2 to No. 5 of the block pavement on granular base and asphalt pavement on granular base are nearly the same, indicating similar behaviour of both pavements under load at a given depth, and that a block pavement on cement-stabilized granular base has low deflection and high load-spreading capability.

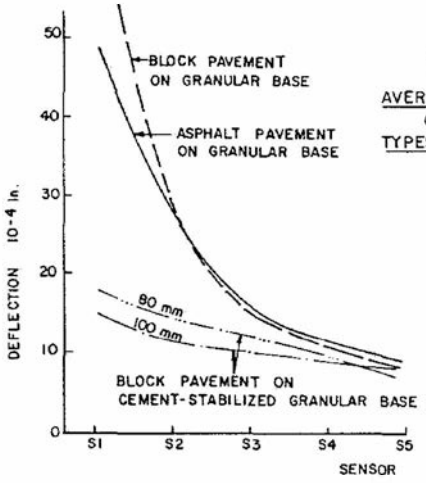

FIGURE 5
AVERAGE OF DEFLECTIONS OF DIFFERENT TYPES OF PAVEMENT

8. EFFECTS OF COMPACTION OF BLOCK PAVEMENT WITH A 30-T ROLLER

The compaction of block pavement with a 30-T rubber-tyre roller has no effect on the evenness of pavement surface nor on the structural capacity of the block pavements, whether the base is stabilized with cement or not. However, proof-rolling of block pavement with a granular base has increased maximum deflection and the surface curvature index and this has destroyed, to a certain extent, the stability of the structure.

9. CHANGE IN THERMAL CONDITIONS

The winter which followed construction of the test pavements (1981-82) had been severe. The freezing period lasted from December 4th, 1981 to March 15th, 1982: the Freezing Index was 997 degree-days, there were 35 freeze-thaw cycles and the minimum temperature was -35°C.
The second winter (1982-83) was milder with only 35 freeze-thaw cycles and abundant rain during the thawing period. The Freezing Index was only 571 and the minimum temperature fell to -22°C during a ten-day cold spell in February. Spring came early in the first days of March 1983.
Frost penetration under the different types of pavement varied from 1,60 m to 1,88 m during the winter of 1981-82 and from 1,38 to 1,63 m during the winter of 1982-83: the asphalt pavement had the least frost penetration during both seasons (160 and 135 cm, figure 6a);

FIGURE 6 a
FROST PENETATION WITH ASPHALT PAVEMENT

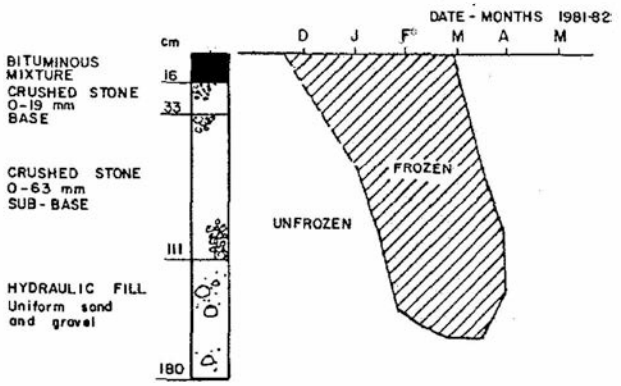

block pavement over concrete base had the deepest penetration (185 and 160 cm, figure 6b); and,

FIGURE 6 b
FROST PENETRATION OF BLOCK PAVEMENT WITH CEMENT-TREATED BASE

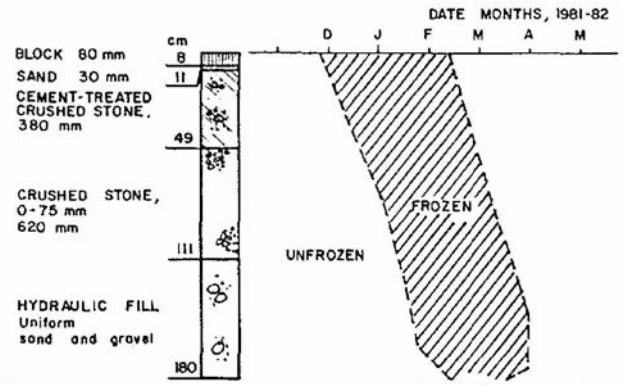

block pavement over granular materials was intermediate (170 and 150 cm, figure 6c).

FIGURE 6c
FROST PENETRATION OF BLOCK PAVEMENT WITH GRANULAR BASE

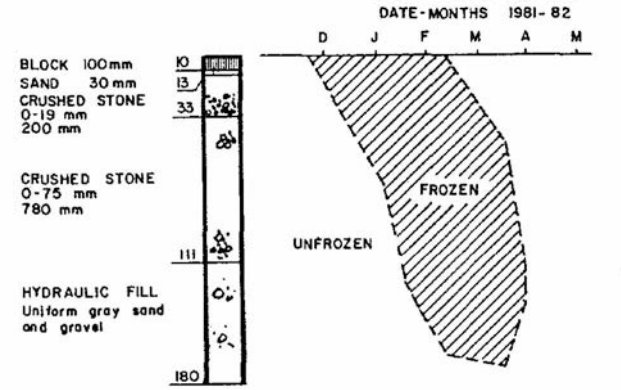

The differences in frost penetration can be explained by the ground temperature distribution: the black-top asphalt pavement had the warmest minimum temperature, -12°C at 50 mm. No delay response is noted upt to 600 mm while the delay in temperature response increases at 800 mm and 1600 mm below the pavement surface (figure 7a);

FIGURE 7a
TEMPERATURE VARIATION UNDER ASPHALT PAVEMENT
WINTER 1981-82

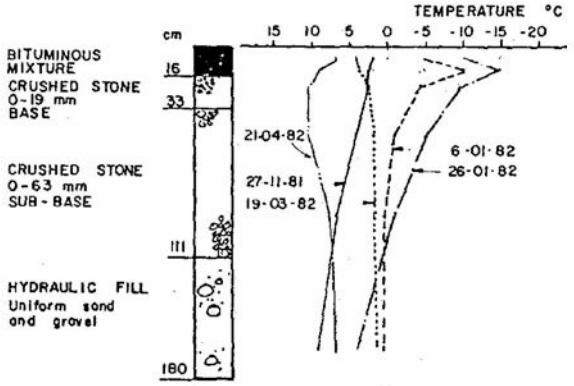

A lighter-coloured block pavement on cement-stabilized base yields the lowest temperature both at the surface (-20°C at 50 mm) and in depth. It also yields a no delay response at greater depth (up to 1600 mm, figure 7b);

FIGURE 7b
TEMPERATURE VARIATION UNDER BLOCK PAVEMENT WITH CEMENT STABILIZED BASE - WINTER 1981-82

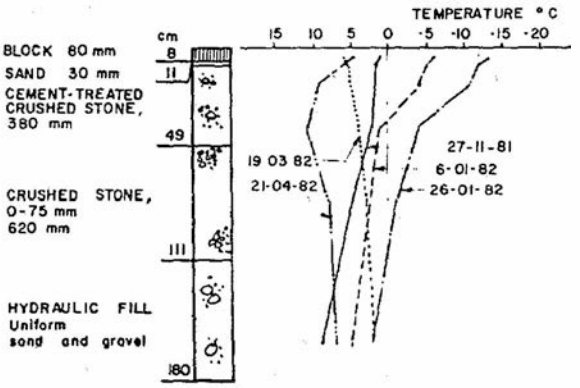

The lighter-coloured block pavement on granular base yields a colder temperature between 100 mm and 600 mm and intermediate temperatures at greater depths. Delay response is similar to the asphalt pavement (see figure 7c).

FIGURE 7c
TEMPERATURE VARIATION UNDER BLOCK PAVEMENT WITH GRANULAR BASE - WINTER 1981-82

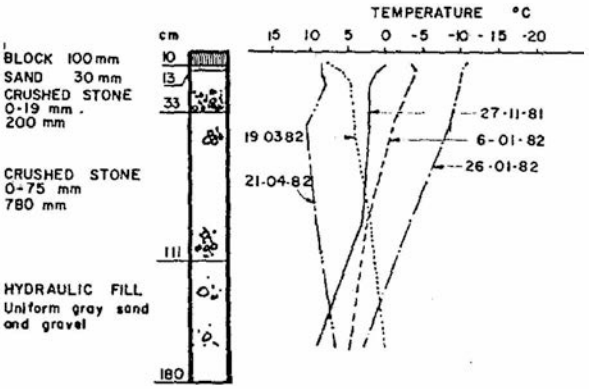

10. CHANGE IN MOISTURE CONDITIONS

Moisture humidity data had been obtained from frozen material during the thawing periods of both winters.

Block pavement on granular base showed the following general moisture distribution profiles in the frozen and unfrozen states: the 0-20 mm base course granular material is saturated while the moisture in the 0-75 mm sub-base approaches its residual saturation in the middle of the layer. Suction theory associated with the behaviour of granular material while freezing could explain this phenomena. During the thaw period, the block pavement showed an increase in water content due to surface infiltration of the pavement and a drainage pattern at the bottom of the 0-75 mm material. During the thawing period moisture contents increased to the end of April as thawing progressed (figure 8a).

FIGURE 8 a
MOISTURE CONTENT UNDER BLOCK PAVEMENT WITH GRANULAR BASE

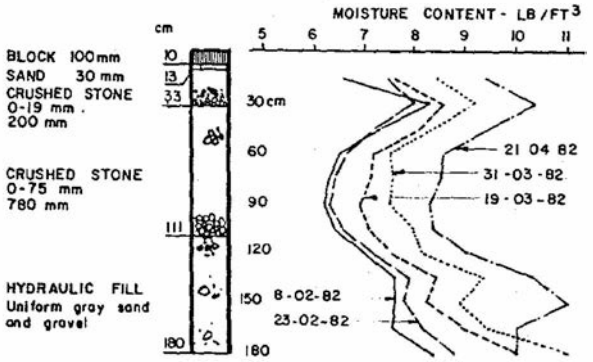

The moisture profile of the base course under the asphalt pavement differs from the block pavement since it is covered by an impervious bituminous concrete. This base course layer is not saturated and the moisture is near the residual water content (see figure 8b).

FIGURE 8b
MOISTURE CONTENT UNDER UNDER ASPHALT PAVEMENT

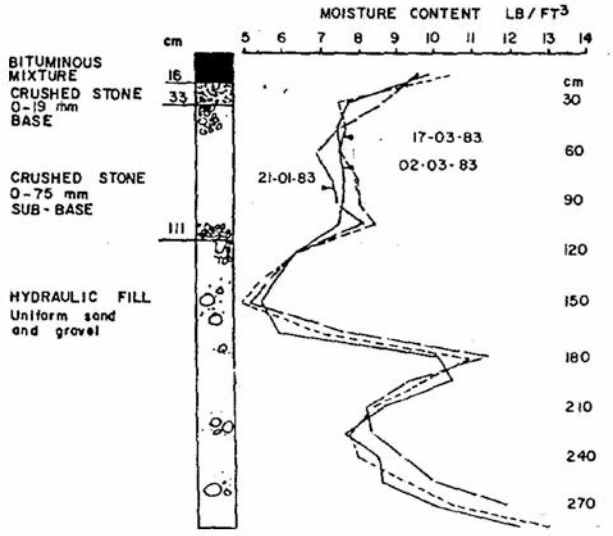

1. CHANGE IN STRUCTURAL BEHAVIOUR

ynaflect deflections were measured three times fter construction: once at the end of the onstruction, again in the fall of '82 and fially in the summer of '83. Test results in igure 9a show practically no change in deflcion with time for block pavements on granular ase, and only a slight decrease of deflection ith time for block pavements on cement-stabilized base.

FIGURE 9a
CHANGES IN STRUCTURAL OF BLOCK PAVEMENT

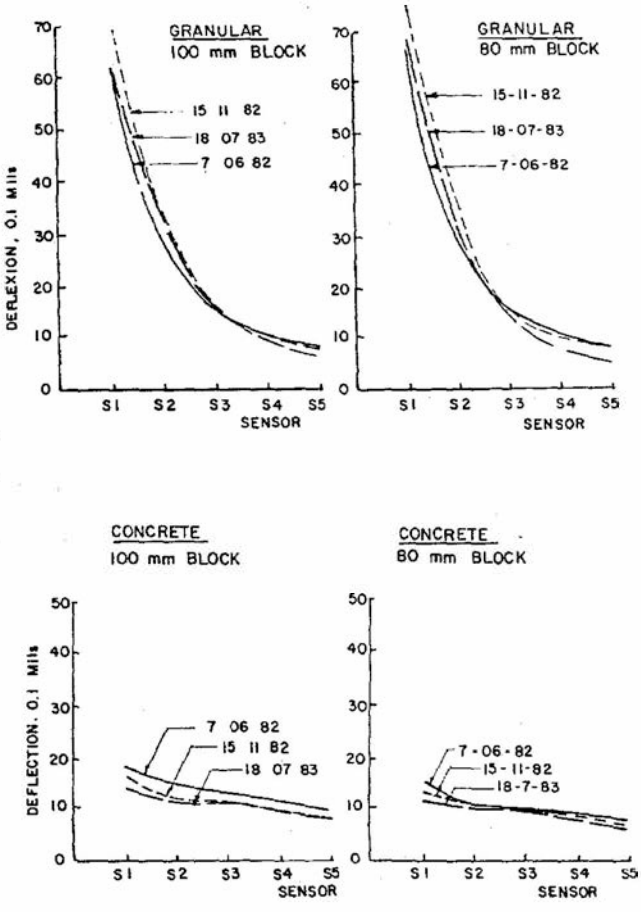

Test results of asphalt pavement are illustrated in figure 9b for three distinct areas in the container port: the test section C, an old pavement section and the pavement between the rails of the gantry crane. All three sections show strengthening of pavement with time, by a decrease in maximum deflection of almost 30%. The difference in the behaviour of block and asphalt pavements may be attributed to the moisture content of the 0-20 mm crushed stone bases: having increased under the paving blocks, it decreased to the residual moisture content under the asphalt pavement.

FIGURE 9b
CHANGES IN STUCTURAL BEHAVIOUR
OF ASPHALT PAVEMENT

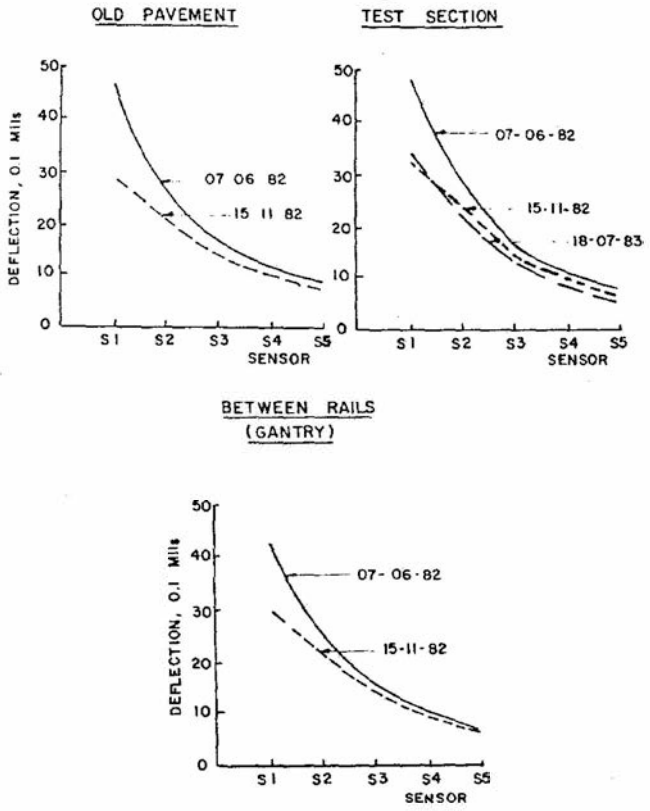

Deflections were also measured for conditions of heavy loading using a gantry crane with wheel loads of 45 tonnes. Test results are summarized in Table 3 for block pavements on cement-stabilized and granular bases and asphalt pavement on a granular base. The results clearly indicate that, under very heavy wheel loads, a block pavement with granular base performs as a flexible pavement whereas block laid on a good, cement-stabilized crushed stone base performs as a rigid pavement with a very low surface deflection and a very high spreadability index.

Table 3: Deflection measurements under dynaflect and gantry loadings

Type of pavement	Block pavement Cement stab.	Granular base	15 mm asphalt on granular base
Under Dynaflect loading			
Max. deflection	0.0012	0.0065	0.0035
Surf. curvature	0.0002	0.0031	0.0011
Spreadability I.	80%	40%	50%
Under Gantry Loading			
Max. deflection	0.0040	0.0410	0.0300
Surf. curvature	0	0.0140	0.0090
Spreadability I.	100%	47%	51%

12. DEGRADATION OF PAVEMENT

At the Racine Terminal two years after construction, the block pavement with granular base is still in excellent condition. Very few blocks are cracked and there is one localized minor surface depression. The performance of block pavement with cement-stabilized base is in equally good condition after two years of service, except in one area where blocks cracked under container legs. The performance of the asphalt pavement is also excellent except for a few low-temperature cracks.

The only serious problem is caused by water infiltration along the perimeter curb of the block pavement. Indeed, where block or asphalt rest on a granular base, the pavement edges settled as much as 40 mm relative to the curb level. These settlements are the cause of longitudinal edge-cracking in the asphalt surface and are generally more pronounced at the block side of the curb than at the asphalt side. In the fall of 1982, one year after construction, depressions along the perimeter curb were corrected by raising the base of the block pavement and by patching the asphalt pavement.

In contrast to the block pavement at the Racine Terminal, the Task Terminal block pavement has not performed well. With but one year of service, the pavement failed completely under the action of the crawler crane along the dockside. Because the quality of the blocks and the base course compaction were questioned, the pavement was rebuilt with new block and a new base to rigid specifications and control. Although the new pavement has performed better it, too, is degrading rapidly. This experience indicates that interlocking paving blocks should not be used under such severe loading conditions.

CONCLUSIONS

a) Five test sections have been designed and built to compare, under Canadian conditions: 80 and 100 mm block pavements with 150 mm thick asphalt pavement; two types of foundation under block pavements: cement-treated granular crushed stone base and conventional crushed stone base; the effects of loading vehicles on performance: rubber-tyred gantries with crawler cranes.

b) The pavement structure of the five sections at the Racine Terminal have been adequately designed by the USCE Method for Flexible Pavement and the PCA Method for Cement-Stabilized Base Pavement. All construction materials were of high quality and closely controlled.

c) The performance of pavements, during and after construction, were closely monitored by measuring the strength of each component layer, the change in moisture condition, the temperature variation, the frost penetration and the rutting and cracking of surfaces.

d) Typical values of Dynamic Moduli of different paving materials have been established in terms of mean and dispersion as well as the gain in strength and spreadability of pavement with the addition of each layer.

e) Proof-rolling by several passes of a 30-T rubber-tyred roller has no effect on a block pavement.

f) The pavements have gone through two winters: one severe and one mild. Forst penetration varied between 1,38 to 1,88 metres, with the highest penetration in the block pavement with concrete base and the lowest under the asphalt pavement.

g) After two years of service, the moisture content of the 0-19 mm base course is saturated under block pavement and near its residual saturation under asphalt pavement, indicating the need for more drainage under a block pavement with non-treated granular base.

h) The asphalt pavement gained strength during the first year of operation while the strength of a concrete block pavement remained constant.

i) Under gantry loading, block pavement with granular base performs as a flexible pavement whereas block pavement with cement-stabilized crushed stone base performs as a rigid pavement.

j) Both block pavements (as designed) performed well after two years of traffic composed of trucks trailers, fork lifts and gantries or straddle carriers. The pavement with granular base appears more sensitive to poor drainage whereas the pavement with cement-stabilized base appears more sensitive to councentrated loads. More study is needed in this area.

k) Pavement sections made with either 100 mm or 80 mm blocks have given equal performance, after two years of service.

l) More research is needed to clearly define the limitations of use in areas where dockside crawler cranes or containers may damage blocks.

m) Drainage should be provide along curbs to control settlement and heaving.

n) The present cost of concrete block pavement is significantly higher than pavement. However, it will become competitive as the initial cost of block surfacing approaches that of asphalt surfacing or as the additional benefits of block pavement are proven (resistance to cracking, greater flexibility, resistance to oil).

References

1-Yoder E.J. and Witczak M.W. "Principles of Pavement Design" 1975

2-Shackel B. "Response of Interlocking Concrete Block Paving to Simulated Traffic Loading" 1980

3-Sharp D.G. and Armstrong P.J. "Construction and Initial Performance of the Concrete Block Test Pavement at ARRB" 1981