10th International Conference on Concrete Block Paving
Shanghai, Peoples Republic of China, November 24-26, 2012

Compaction Test Method for Dry Concrete

Mariana L. Marchioni, Engineering. Mariana.marchioni@abcp.org.br
Jorge Lyra, Rafael Pileggi, Claudio Oliveira
Associação Brasileira de Cimento Portland (ABCP)
Av. Torres de Oliveira, 76 São Paulo, SP, BRASIL, CEP 05347-902.

Summary

Dry concrete, also known as no-slump concrete and earth-moist concrete, is used to manufacture paving units and demands vibrocompressers to be molded. The features on the fresh state have influence on the production process, whereas the mix that are easily compacted demands less strength of the equipment and also will result on paving units that are more dense, with higher mechanical resistance and lower water absorption. However, there aren't any test methods for the fresh state, and normally it is used empirical methods. Hence, on this paper it was develop a testing method to analyze the features of the no-slump concrete on its fresh state. The method also provides a specimen that allows testing the hardened state features. With this method is possible to obtain data on strength x time x displacement, as well as swelling, allowing to analyze which mix design is easily compacted and has less elastic recovery. To verify the method it was conducted tests using the mix design of a reference manufactured and afterwards these tests were compared with the paving units produced on the manufactured. The specimen produced on the laboratory reached 90% of mechanical resistance of the manufactured paving units, and lower values of water absorption. Thereby, it is possible to affirm that the testing method can be related to the production process and thus be used to verify modifications on the mix design of the concrete.

Keywords: dry concrete. earth-moist concrete. no slump concrete. manufacturer. paving blocks. mix design.

1. Introduction

The conformation of concrete products through the vibrocompression process is a traditional technique and is widespread on the market. Masonry blocks, paving units for interlocking pavement and drainage pipes are usually produced through this technique.

The basic concept of this technology is to produce concrete with a very low moisture content, almost dry consistency and reduced cohesion, which is mechanically pressed through equipment called vibrocompressores that apply simultaneously forces for pressing with the aid of vibration.

The pressing efficiency is measure by the ability of eliminate the voids of the mixture, that sets in a straightforward manner the cohesion in the fresh and hardened properties of the component. The reason for that is because the reduction of the porosity of the unit is

associated with an increase in mechanical strength and decreased of permeability of the final product, the key factors in performance and durability.

The pressing easiness of a dry concrete is closely related to its mix design and the mobility of its particles in a confined volume defined by the geometry of the product. In this matter, factors such as the flow capacity of the system into the mold, or friction between the particles are crucial.

However, the mix design methodologies conventionally used in the production of dry concrete are only based on the concept of minimizing the porosity of the empirical mixture by direct assays for maximizing the mass of particles capable of filling a certain fixed volume. Moisture is generally defined as the one which ensures the cohesion of the mixture when handled by the operator, as seen in Fig. 1.



Fig. 1 - Practice for empirical evaluation of the characteristics of the dry concrete. It is considered ideal when a portion of concrete maintain cohesion between the particles without leaving a residue on the hand after lightly pressed manually provides cohesion.

Considering the relevance of the components produced with dry concrete, it is possible to affirm that the conventional empirical measurement methodology can be considered a technological set back that limits the systematic control and optimization of formulations developed for this purpose.

Thus, this study shows the development of a technique based on results of compressive rheometry adopted in the compression of drugs and ceramic, which allows quantifying the easiness of pressing. The use of this new test methodology will provide mixtures that are more easily compressed, thereby reducing cycle time and wear of the molds of the vibrocompression equipment. This technique generates a specimen that can be used for characterization in the hardened state; thereby verify that the mass also meets the requirements necessary for the final product.

2. Compressive Rheology

To obtain data consistent with the vibrocompression process, you must submit it to rheometry compressive type testing. Among the compressive rheology methods, the squeeze-flow method is the most common and is used in mortars and cement pastes. This method consists in pressing a non-cylindrical sample confined between two parallel plates controlling the force applied to the specimen and the deformation resulting, as the material spreads out of the area of the plates (Fig. 2). Normally the tests is conducted with a sample of initial thickness of 10mm and the same diameter as the upper plate, but it is possible to use other kinds of configurations if necessary. (Cardoso; PILEGGI, 2010).

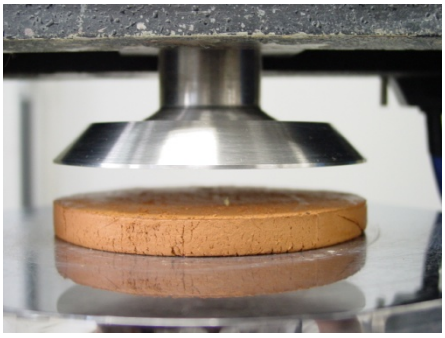

Fig. 2 - Squeeze flow test method

To emulate what happens with the concrete dry for its application in the paving unit it is necessary that the material is confined, so the squeeze-flow method is not suitable. DELALONDE et al (1995) designed an apparatus for the rheological characterization of dispersions after compression by uni-axial pressing of the mass, which applies a compression piston in the sample contained in a rigid mold with a diameter corresponding allowing measurement of the compressibility of the mixture (Fig. 3).

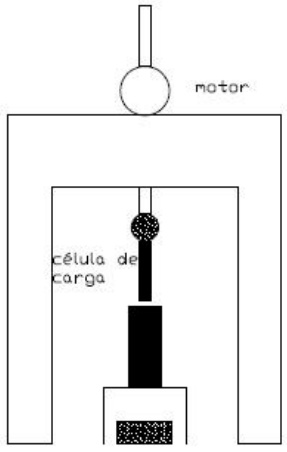

Fig. 3 - Schematic representation of the compressive rheometer (DELALONDE et al, 1995).

This equipment was used to characterize microcrystalline cellulose dispersions on compression and relaxation. At the stage of compression is possible to obtain information on density variation due to the applied force by the piston, and at the relaxation stage, to verify its behavior on viscoelasticity. In its work DELALONDE et al (1995) chose the dispersion with the best water / pulp results in accordance with the flux assay performed previously and obtained a curve of force vs. time for both stages (Fig. 4).

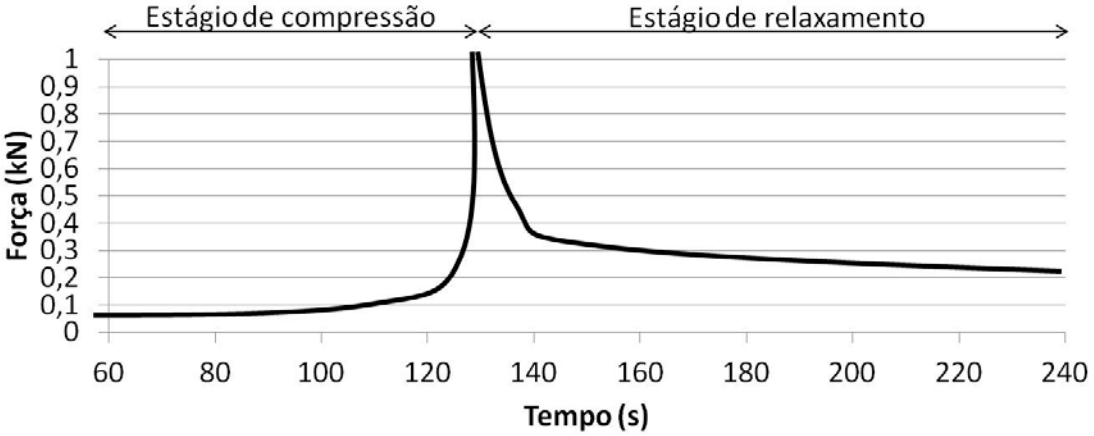

Fig. 4 – Compressibility and relaxation measurements of a microcrystalline cellulose dispersions (DELADONDE et al, 1995).

The same methodology can be used for dry concrete, where the mass is contained in a rigid mold and pressed until the desired firmness and cohesion. By obtaining the force data, time and displacement of the piston is possible to study the important features of the mix, thus simulating the vibro compaction process.

3. Materials and methods

In order to adapt the proposed methodology it was necessary to develop a few parts to assemble on a pressing machine. In Fig. 5 it is shown a schematic representation of the components developed: base support mold (5a), pressing piston (5b), split mold for the specimen (5-C) and a cylinder to hold the mold steady and supporting the force applied during the pressing (5d). Figure 5-E shows the assembled set for the test.

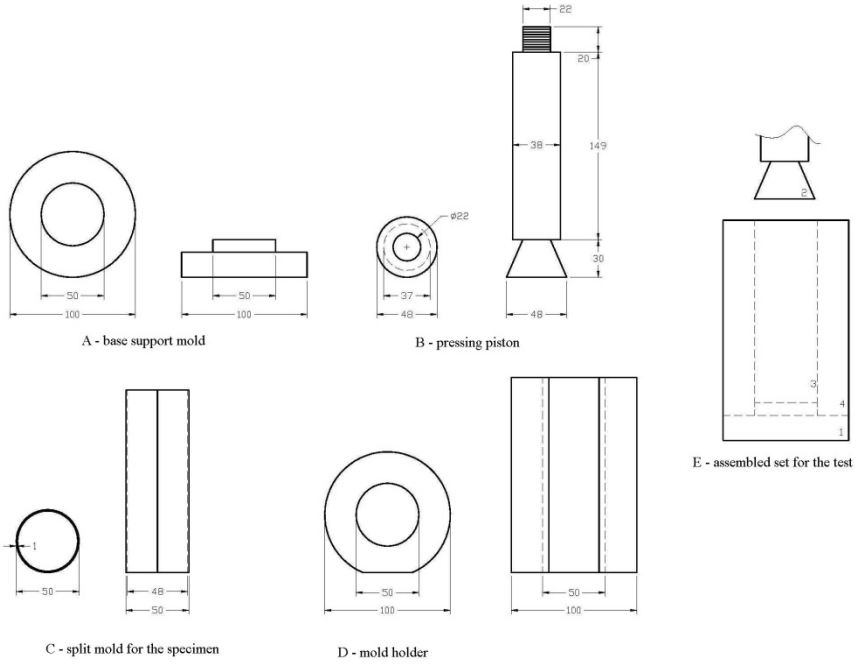

Fig. 5 – Schematic representation of the parts developed for the compressive rheology test method. A - base support mold. B - pressing piston. C - split mold for the specimen D - mold holder E - parts set for the test.

The set allows to press the mixture and to obtain a full specimen afterwards. These devices are attached to a universal testing machine, in this case an EMIC DL 10000 with 100 kN load cell and thereby obtaining a product similar DELADONDE et al (1995) one. These parts are assembled as shown in Fig. 6 and in Fig. 5-E.



Fig. 6 - System positioned for pressing the dry concrete mix.

To allow the removal of the specimen maintaining its integrity was necessary to develop a device for extracting the split mold holder. The machine operation is shown in Fig. 7 where

the specimen and the mold are positioned and locked in the device by bolts, and an electric motor push a piston into the mold extracting the holder.

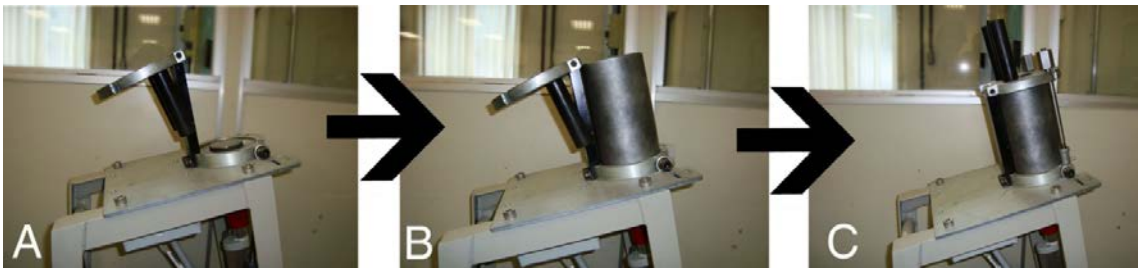

Fig. 7 - Operation of extractor specimens. A - equipment without the mold. B - placing the mold. C - fixed mold equipment.

Fig. 8 shows the specimen being extracted from the mold using the developed equipment.



Fig. 8 - Slip mold support being extracted

4. Test parameters

On the vibrocompression process, the mixture is placed in the mold and pressed. The equipment allows control of the mixture feeding time, whereas if the time is insufficient the unit is less dense and when the time is excessive the unit is higher than the specified height (Fernandes, 2008).

In this method the mixture is placed manually in the mold, and it is possible to emulate the feeding time by ranging the amount of mixture. Since the software allows control of the speed of the piston and its displacement, is it possible to execute two types of tests, controlling the maximum strength to be reached or the desired height of the specimen, indicating the stop position of the piston. Thus, it is possible to set a certain strength and see how much it press a given mass of dry concrete or fix a size for the samples and see what was the force required to compress it.

The software provides information from force-deformation vs. time curves, allowing analysis of the characteristics on the compaction of concrete mix.

5. Test method

In order to check the reliability of the test method it was used as reference a manufacturer using a vibrocompression equipment. It was collect paving units at the reference manufacturer and those were characterized on its hardened state so later they could be compare to those produced after the test method.

To obtain specimens with the same density and mechanical strength of those produced in the reference manufacturer it was used the same mix design and materials of the reference. The mixture moisture was not the same as used in reference works since it needs to be adjust to the pressing method.

The mixture of materials was made in a grout mixer and it is important to ensure a homogeneous mixture. For the sequence of mixture it was followed Medeiros (1998) recommendations, being the following order/time: aggregate, cement, mixing for about 1 minute, then adding water and the mixture mixing and again 2 to 4 minutes.

After weighing the mass, the mixture is placed in the mold, pressed, the mold is extracted with the aid of extractor and sent to the curing chamber without removing the two-party mold. After 24 hours the mold is release and it is obtain the features on its fresh state. The specimen remains them on the curing chamber for 28 days from the molding and then to be characterized in its hardened state.

6. Results

6.1. Characterization of the reference parts of the plant

To allow a better comparison between the pieces produced at the manufacturer and those obtained after the rheology test, 5cm diameter specimens were extracted from the paving units with the aid of a rotating probe (Figure 9).

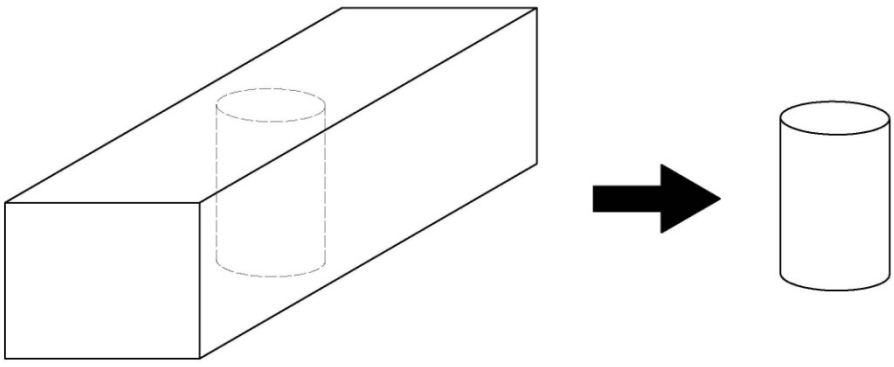

Fig. 9 – 5cm diameter specimens were extracted of the paving unit using a rotating probe.

It was determined the water absorption, dry density and void ratio according to ABNT NBR 9778 and compressive strength according to ABNT NBR 5739 and the results are gathered in

Table 1. The fresh density, i.e., the density of the part immediately after molding, was estimated assuming a moisture content of 6% in mass in order to subsequently compare this feature with the specimens molded in the compression test rheometry.

Table 1 - Characterization results in the hardened state

Parameter	Reference	T200	T215	T230	T271	T200FM
Fresh density (kg/m3)	2283	2135	2248	2273	2286	2257
Dry density (kg/m3)	2154	1986	2091	2114	2126	2099
Compressive strength (MPa) and standard deviation	29,06 ±9,03	17,32±2,02	25,75±1,18	25,32±1,40	25,14 ±2,67	26,81±2,23
Strength variation coefficient	31%	12%	5%	6%	11%	8%
Water absorption (%)	6,88	8,44	4,67	5	6,44	4,23
Void ratio (%)	14,73	17,77	10,49	11,17	14,46	9,54

6.2. Definition of moisture content

The moisture content of concrete is closely connected to the equipment used, for each one there is an optimum moisture content where the mix will result in a maximum degree of compression and thus the maximum density. Thus, it was necessary to define the ideal moisture content for pressing in the laboratory. The moisture reference to dry concrete ranges from between 6% and 8% by weight.

The anhydrous mix design from the reference manufacturer were made with a moisture content of 6.0%, 6.5%, 7.0%, 7.5% and 8.0% , and the admixture was fixed on 1,0% by cement weight according to the manufacturer reference.

The piston stopping was set to obtain an 80mm specimen, thereby obtaining the same height as the reference specimens. The weight of each specimen was determined in order to achieve the same density as the reference, being 2500kg/m^3, with an increase of 5% mass due to water loss. Thus, for a specimen of 80mm 435g mass was used.

The mix was then placed manually in the mold, pressed, the mold was then extracted from the holder and immediately after that it was removed for visual analysis test.

Observing the specimens obtained, the moisture content adopted should be as high as possible without occurring demolding difficulty, analogous to what occurs on the vibrocompaction production process, where the higher the water content the more difficult to fill the mold, but easier to compact, being necessary to use an optimal moisture content for those two conditions.

On the visual analysis of the specimens, mixtures with moisture content from 6.0%, 6.5% and 7.0% of the test samples were easily extracted from the mold, from 7.5% moisture mixture the mix began to adhere on the walls of the mold and some specimens were broken. In the 8.0% moisture mixture the specimens were attached to the mold and most broken as being demolded.

It was then adopted humidity of 7.0% being the highest moisture content where there was no breakage of the specimens.

6.3.Running the test

With 7.0% moisture content, were made tests ranging the specimens weigh (T200, T215, T230, T271) simulating the influence of feeding time in the process of vibrocompaction according to Table 2. The initial weight was 271g (T271), being that the necessary weight to result in a 2500 kg/m^3 density. In these tests the piston was set to stop for a specimen with a 50mm height, with the maximum force being that upon reaching the specified time. The height was reduced to alleviate the effect of varying density over the height of the specimen due to the method of uni-axial pressing. The 50mm height was adopted to keep the height / diameter equal to 1, enabling the execution of the test method of compressive strength according to ABNT NBR 5739.

Table 2 – Test informations

Test	Weight (g)	Number of specimens	Specified Height (mm)	Maximum Strength (kN)
T200	200	60	50	21,68
T215	215	60	50	72,74
T230	230	60	50	90
T271	271	48	50	90
T200FM	200	12	-	90

Simulations were also made without limiting the height of the specimen, T200FM, in order to evaluate the maximum compression that the mixture allows. In this case, the limiting would be the maximum force applied by the piston, in which case was considered the equipment limit of 90kN. For this test it was chosen to use the least amount of mass that results in specimens with height / diameter equal to 1 (200g). In all tests the load application speed was 1 mm / s.

After pressing these specimens they were immediately placed in a curing chamber still in the split-mold and demoulded after 24 hours with the aid of a rubber mallet to avoid cracks caused by the demolding that could cause variation on the hardened state tests. After demolding the characteristics of fresh weight were evaluate, being the curves of force versus displacement, the fresh density and elastic recovery. The fresh density is determined by considering the ratio of the mass of the specimen and its size after the demolding and the elastic recovery is the difference between the height and the measurement obtained in the press after the de-forms.

The characterization was performed in the hardened state after 28 curing days, starting from the molding. Once cured the specimens were removed from the curing chamber for determining the parameters of the hardened state evaluation, being water absorption and void

ratio according to ABNT NBR 9778 and compressive strength, according to ABNT NBR 5739.

6.4. Characterization fresh state

In the curves of force versus displacement of the piston was considered only the pressing portion, i.e. the displacement portion from which the mixture began to apply a force on the piston. It is possible to identify four different curves for the test T200, T215, T230 and T271, showing that the test method is sensitive to changes in the amount of compressed mass (Fig. 10).

The piston reach on Tests T200, T215, T230 and T271 the following heights of 95.01 mm, 95.02 mm, 92.03 mm and 82.17 mm resulting in specimens of 49.99 mm, 49.98 mm, 52.97 mm and 62.83 mm, respectively. Even though the program was set to compress specimens 50 mm height, on both Tests T230 and T271 the test stopped before it reaches that height due to the fact that the load limit of the equipment was achieved, thus it couldn't not compacted the mix on that size . This fact may be related to the feeding time stage. As happens in practice, where there was excess weight the specimen did not reach the specified dimension of 50mm.

In tests T200 and T215 was possible to compress the mix to the desired height, but does not reach the maximum compression that allows the mixture resulting in less compact parts.

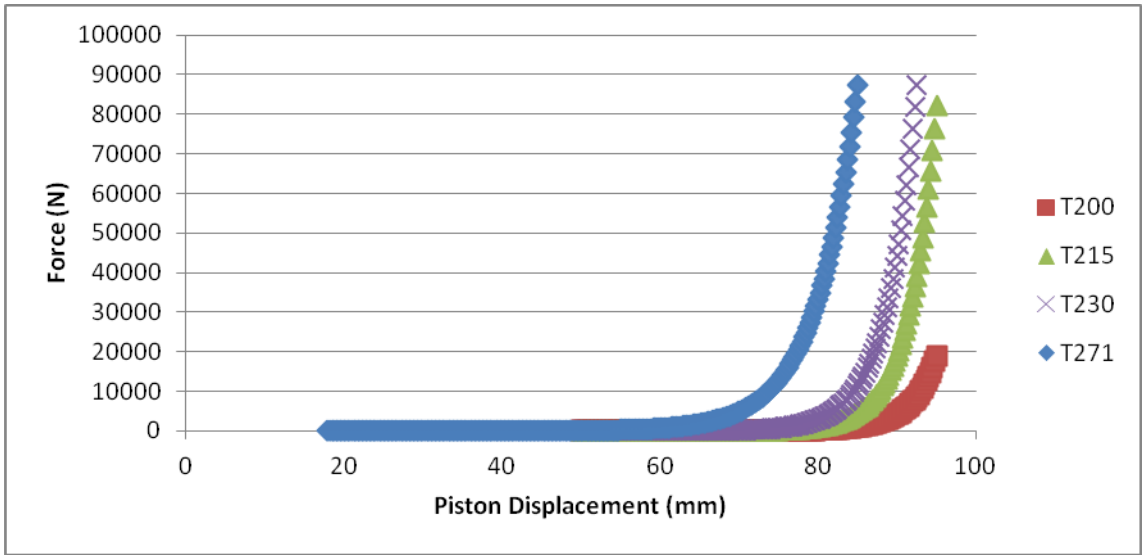

Fig. 10 - Force versus displacement of the piston curve for the mass variation tests

In Fig. 11, comparing the test T200 and T200FM it was observed that in the latter case the mixture was compressed as much as the equipment allows, with the maximum displacement of the piston of 98.66 mm resulting in test specimens having a height of 46.34 mm. In the production process there is no limitation in height, the device compresses the mix as much as possible, that manner consistent with the test method of Test T200FM.

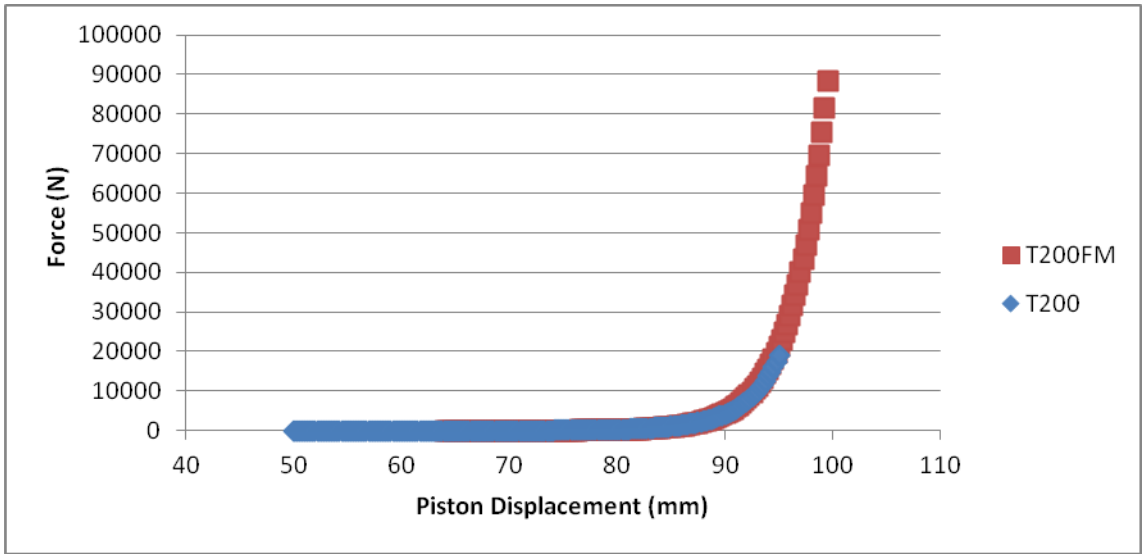

Fig. 11 - Curve of force versus piston displacement and comparing T200 T200FM.

Also related to the time of force, when force is insufficient the unit has a low density as can be observed on T200 (Fig. 12). The fresh density rises as more mix is added. Comparing the densities obtained in the tests T215, T230 and T271 with the fresh density estimated from the factory can be stated that the goal was reached to conform with density similar to the factory reference.

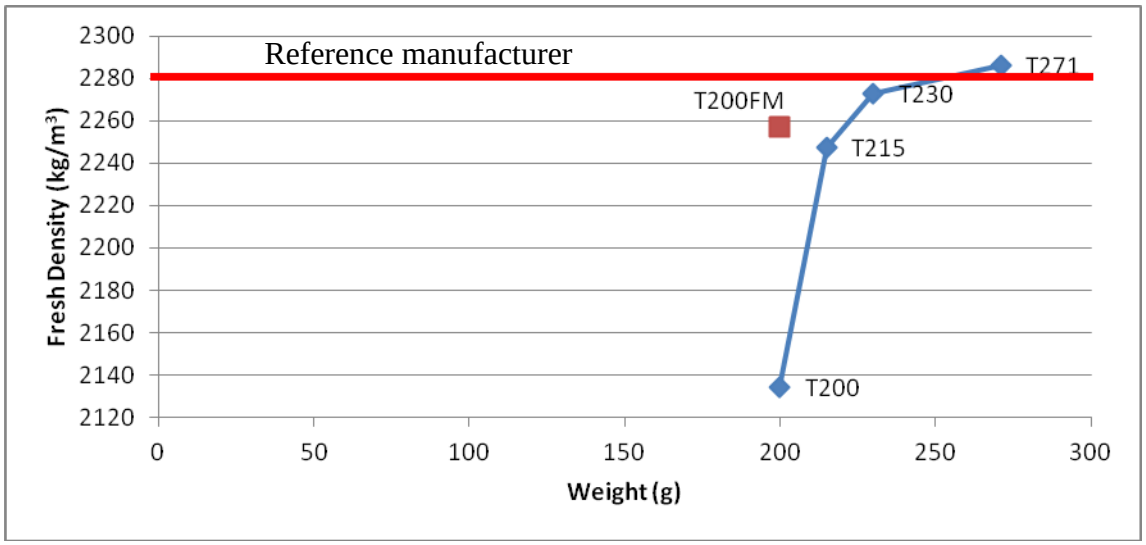

Fig. 12 - Fresh Density

6.5. Characterization in the hardened state

The data obtained in the characterization in the hardened state are gathered in Table 1. The test results T200FM, which are in focus, are those closest to the reference, being 97% of the dry density and 92% of an average resistance of the manufacturer reference.

In Figure 13 it can be seen an increasing linear relationship between the dry density and mechanical resistance.

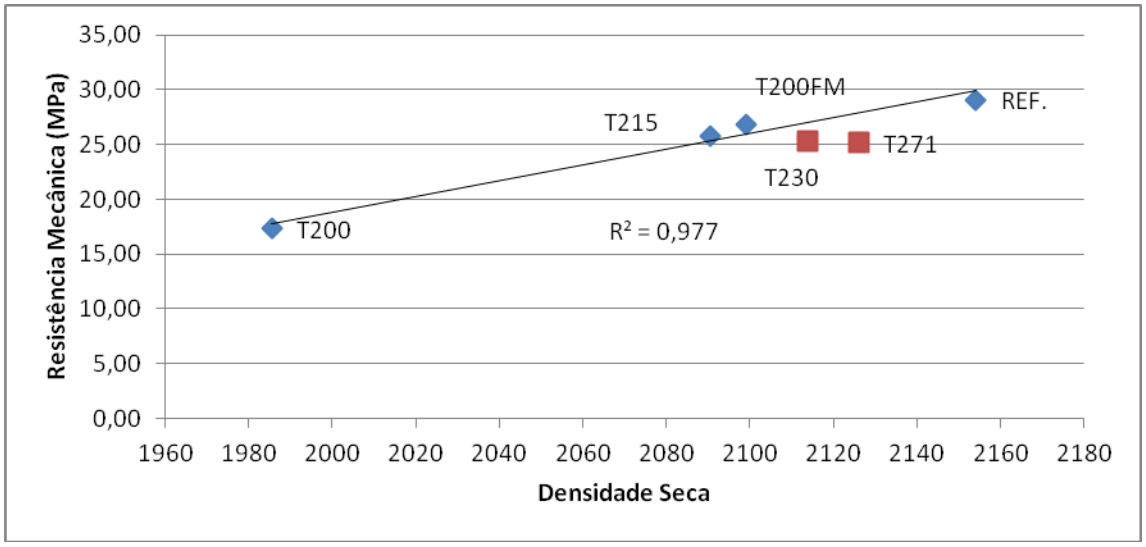

Fig. 13 - Mechanical Resistance x Dry Density

The T230 and T271 tests were outside the trend line, with strength less than the test T200FM obtained despite the dry density higher. This fact can be explained by the fact that in both cases the amount of mix used did not allow a uniform compression in the method of uni-axial pressing, so even dry density remained high the compression strength. This is due to variation of pressure by the pressing method used, where the friction between the particles and the surface of the mold prevents the pressure to be transmitted uniformly and fully across the specimen leading to variations in density along the high (Fig. 14) (Albero 2000).

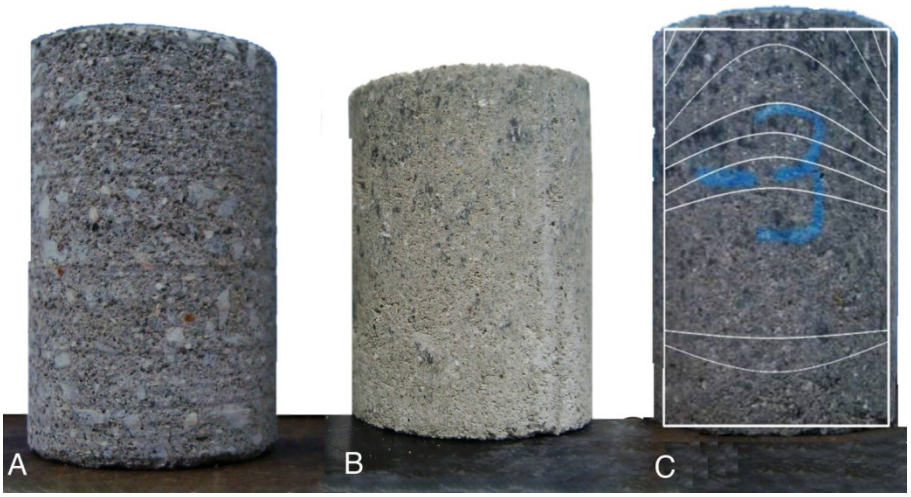

Fig. 14 - A - the specimen extracted from the reference part B - test piece produced after mechanical compressive rheometry C - the specimen T271 which can be visually noticed variation in density due to variation in pressing pressure applied in the mold, as outlined .

On T230 and T271 it was also found higher values of elastic recovery (2.26 mm and 2.65 mm, respectively) as shown in Fig. 15.

The elastic recovery is related to the energy that remains stored in the unit during pressing and occurs as it takes to load the specimen, leading to an increase in size that may cause cracks (Albero, 2001). The higher the pressing pressure increases the maximum number of contact points between the particles per unit volume and the amount of elastic deformation in each of the contact points (Albero, 2001).

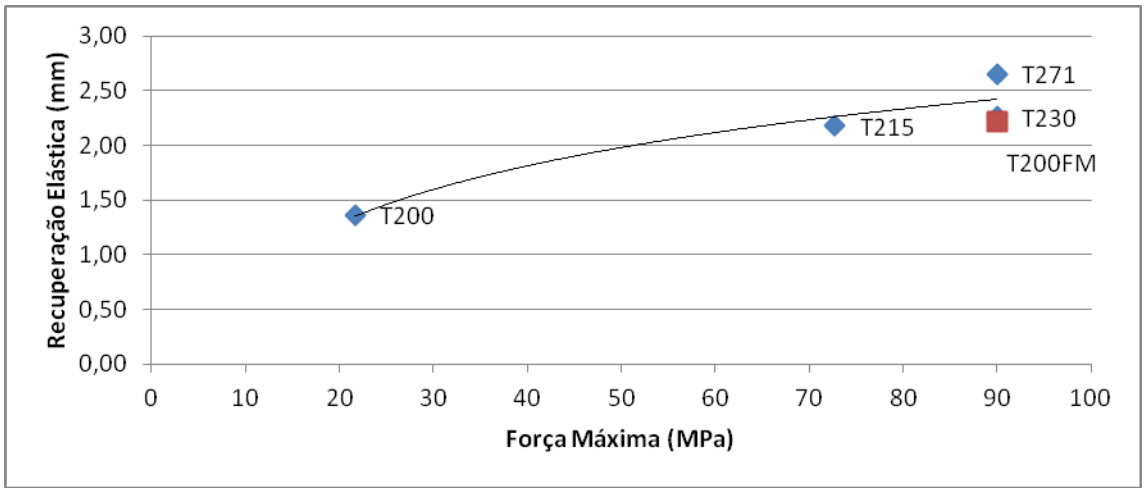

Fig. 15 - Maximum strength x elastic recovery

Kept constant in these tests, other factors that can also have influence on the elastic recovery are the moisture content, load application speed and household characteristics and the mix. Mix with higher moisture shown higher plasticity and a lower elastic recovery, as well as decreasing the rate of application of the load also reduces the elastic recovery, since it allows more time for the particles rearrange and achieve more stable positions (Albero, 2001). In a mix design study, one can establish a weight and promote changes in particle size and analyze the influence on the elastic recovery, highlighting the desirability of a mix with lower elastic recovery to avoid defects on the paving unit.

7. Conclusions

Among the methods used to perform the assay the option of using a reduced quantity of mix and allowed pressing until the load cell limit seems to be the most appropriate. The samples obtained in this method showed characteristics similar to those extracted from reference manufacturer, reaching 97% of its dry density and 92% on mechanical strength. This method is also the closest to what happens on the vibrocompaction process.

The dry density and mechanical strength are the parameters that provide the best assessment of the characteristics of the specimens molded and extracted. The method for determining the voids may have been disrupted by the outer surface of molded parts, being necessary to use another method that could provide accurate comparison.

Having the specimens reached test values compatible with those of the reference manufacturer, the methodology prove itself to be a useful tool to improve the mix design

techniques and may be used to improve the performance of products made from cement, including the optimization of cement consumption making them more sustainable.

8. References

ALBERO A. J. L., A O**peração de Prensagem: Considerações Técnicas e sua Aplicação Industrial – Parte I – O preenchimento das cavidades do molde**. Cerâmica Industrial. São Carlos, v.5, n.1, p. 23, set./out. 2000.

ALBERO A. J. L., A O**peração de Prensagem: Considerações Técnicas e sua Aplicação Industrial – Parte III: Variáveis do Processo de Compactação**. Cerâmica Industrial. São Carlos, v. 6, n. 1, p. 26-27. mai./jun. 2001.

ASSOCIAÇÃO BRASILEIRA DE NORMAS TÉCNICAS. **NBR 5339**. Argamassa e concreto endurecidos - Determinação da absorção de água, índice de vazios e massa específica. Rio de Janeiro, 2005.

_____. **NBR 5739**. Concreto - Ensaios de compressão de corpos-de-prova cilíndricos. Rio de Janeiro, 2007.

CARDOSO, F. A.; PILEGGI R. G.; JOHN V. M. **Squeeze-flow aplicado a argamassas de revestimento: Manual de utilização.** BT/PCC/545. Departamento de Engenharia de Construção Civil – EPUSP. São Paulo, 2010.

DELALONDE, M. et al. **The rheology of wet powders: a measuring instrument, the compresso-rheometer.** International journal of pharmaceutics. 130 p. 147 – 151. Elsevier. 1995.

FERNANDES, I. **Blocos e pavers: produção e controle de qualidade**. São Paulo: Treino Assessoria e Treinamentos Empresariais LTDA, 2008.

Acknowledgments

We thank the Brazilian Portland Cement Association (ABCP) for the opportunity and help in this work and Renger Artifacts for providing materials and information requested, especially its industrial director Eng.Valter Ferigato (in memoriam).