

Development of Surface Temperature Testing Equipment for Paving Materials to Mitigate Urban Heat Islands

Jong-Hwan Ko[1], Woo-Bin Bae[1], Yong-gil Kim[1] and Sang-Rae Kim[1]

[1]Korea Conformity Laboratories Energy & Environment Division Center for Climatic Environment Real-scale Testing, 5, Jeontong-ro, Deoksan-myeon, Jincheon-gun, Chungbuk, Korea
Correspondence e-mail address: ksrae@kcl.re.kr

Abstract :

In this study, we developed surface temperature testing equipment for paving materials according to theirproperties. Climate change has increased heat waves and urban heat islands, causing damage by heating the asphalt of the road and transmitting heat to vehicles and people. To solve this problem, various paving methods such as heat-insulating and water-retentive paving have been developed, but their effectiveness was not verified due to a lack of appropriate testing methodology and equipment for accurate quantitative evaluations. The existing performance evaluation method is to irradiate paving materials using different light sources for a set period of timeper source, measure the temperature via thermocouples, and compare the readings. However, this method causes errors in the result values due to differences in measurement time and the external experimental environment. Therefore, in this study, we developed testing equipment to measure control and experimental groups simultaneously using the same light source in a chamber for which the experimental environment can be controlled. This equipment can quantify the surface temperature mitigation effect of road paving materials according to their properties, and thereby contribute to the mitigation of urban heat islands.

Key Words : surface temperature testing equipment, paving materials, urban heat island

1. Introduction

The National Impervious Area Ratio Survey and Improvement Plan 2013, drawn up by the Ministry of the Environment, classified roads and parking lots as impervious in terms of the pervious/impervious classification criteria for cadastral maps. This is because the paving materialsfor roads and parking lots are generally constructed from impervious materials such as asphalt, cement, and blocks of various similar materials. The nature of these paving materials impacts water circulation, leading to an increase in both the total and peakrunoff. As a result, the total amount of non-point pollutants has increased while the amount of rainwater that can penetrate below the ground or is available has decreased. In terms of heat circulation, the radiant heat of the sun that is transmitted to the surface of the earth is reflected in the daytime, causing urban heat islands. Heat retained in paving materials then causes tropical conditions.

The National Long-term Ecological Research Project Stage 3Report (2013) of the National Institute of Environmental Research introduces Korea'sclimate change prospects for climate

elements such as temperature and precipitation. In the case of RCP(Representative Concentration Pathway) 4.5(Fig. 1), the region with an annual average temperature of 14°C is limited to the southern coastal area in the first forecast period (20112055), but it is expected to expand to the Gyeongnam, Jeonnam, and Jeonbuk regions in the second forecast period (20562100). In the case of RCP 8.5 (Fig. 2), the affected regions (20562100) were Gyeongnam and Jeonnam, but this expanded to the entirety of South Korea and some regions of North Korea in the second forecast period. Precipitation was expected to undergo a general increase the regions with an annual precipitation of 1,700 mm or more expanded from a part of the southern coast and a part of the east coast of the Gangwon Province, to the entire inland area of South Korea (Figs. 3 and 4).

The above research results predict a scenario where the temperature and precipitation of the Korean Peninsula increase significantly due to climate change. To respond to this, the road construction industry is producing various paving products such as porous or pervious paving materials, pervious pavingblocks, and water-retentive blocks. However, only Concrete interlocking block for side walk and road(KS F4419) provides the criteria for evaluating the performanceof these pervious materials in terms of their ability to cope with regular rainfall conditions and heavy downpours. Since there is neither regulation nor a standardized testing method for road paving regarding mitigation of heat in anurban heat environment, this study aimed to develop a testing method and appropriate equipment for evaluating the heat mitigation of road paving surfaces.

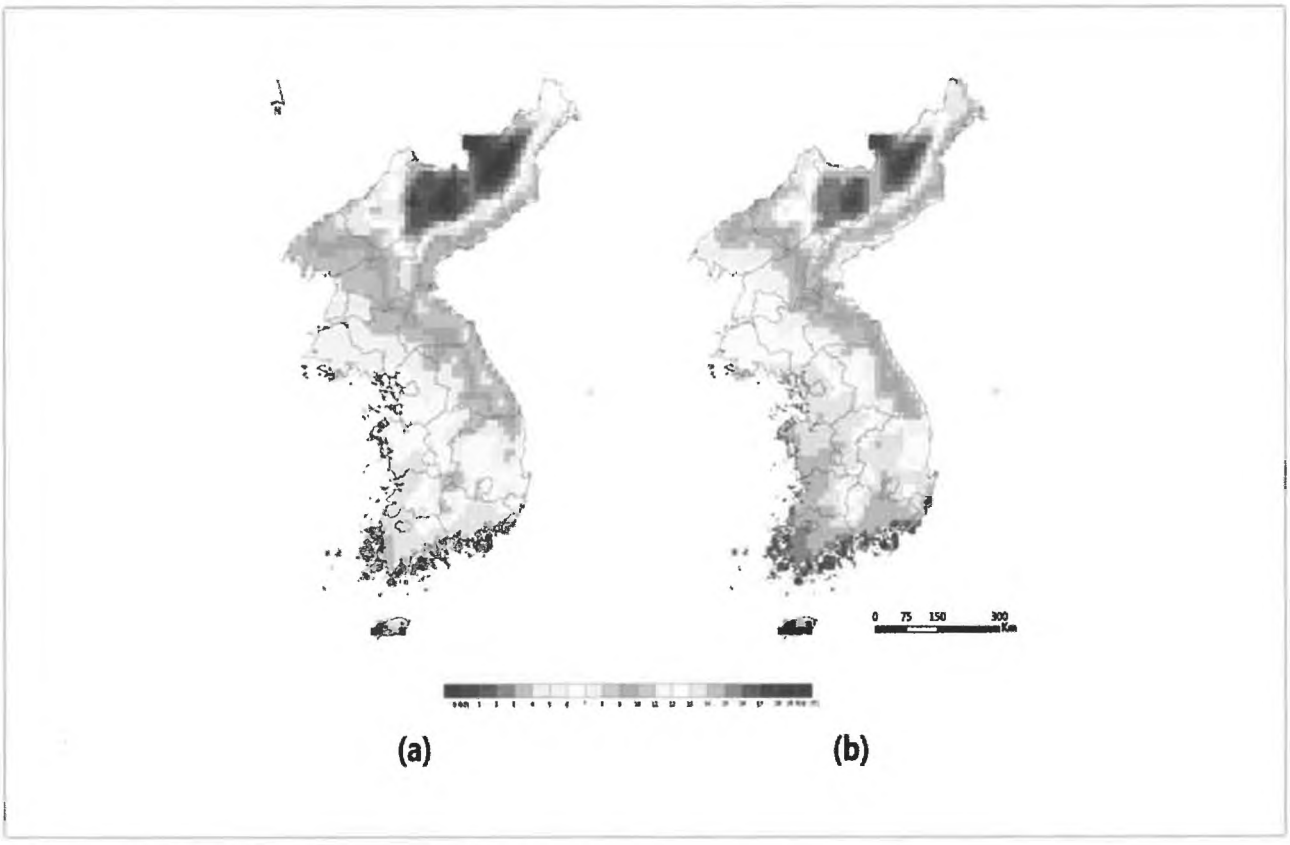

Figure 1. Projected temperature change in Korea based on RCP 4.5
(a) 20112055 (b) 20562100

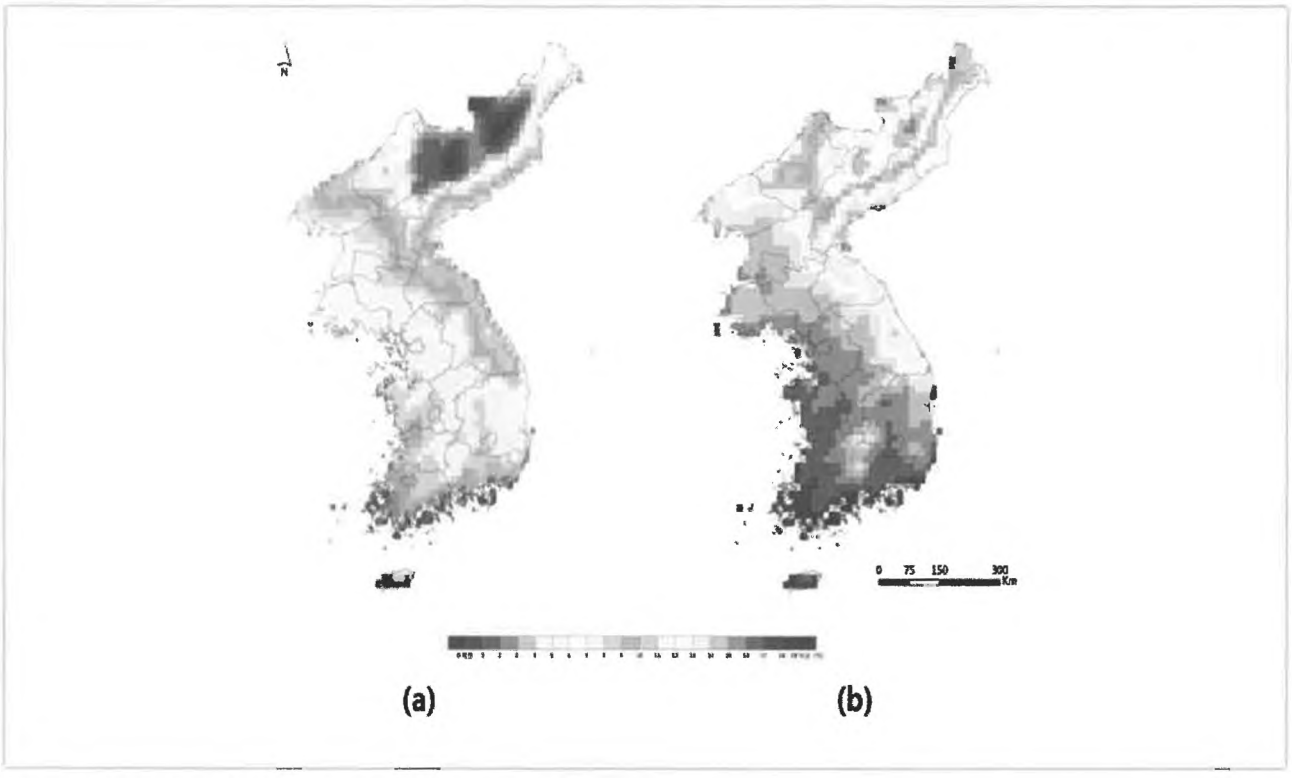

Figure 2. Projected temperature change in Korea based on RCP 8.5
(a) 20112055 (b) 20562100

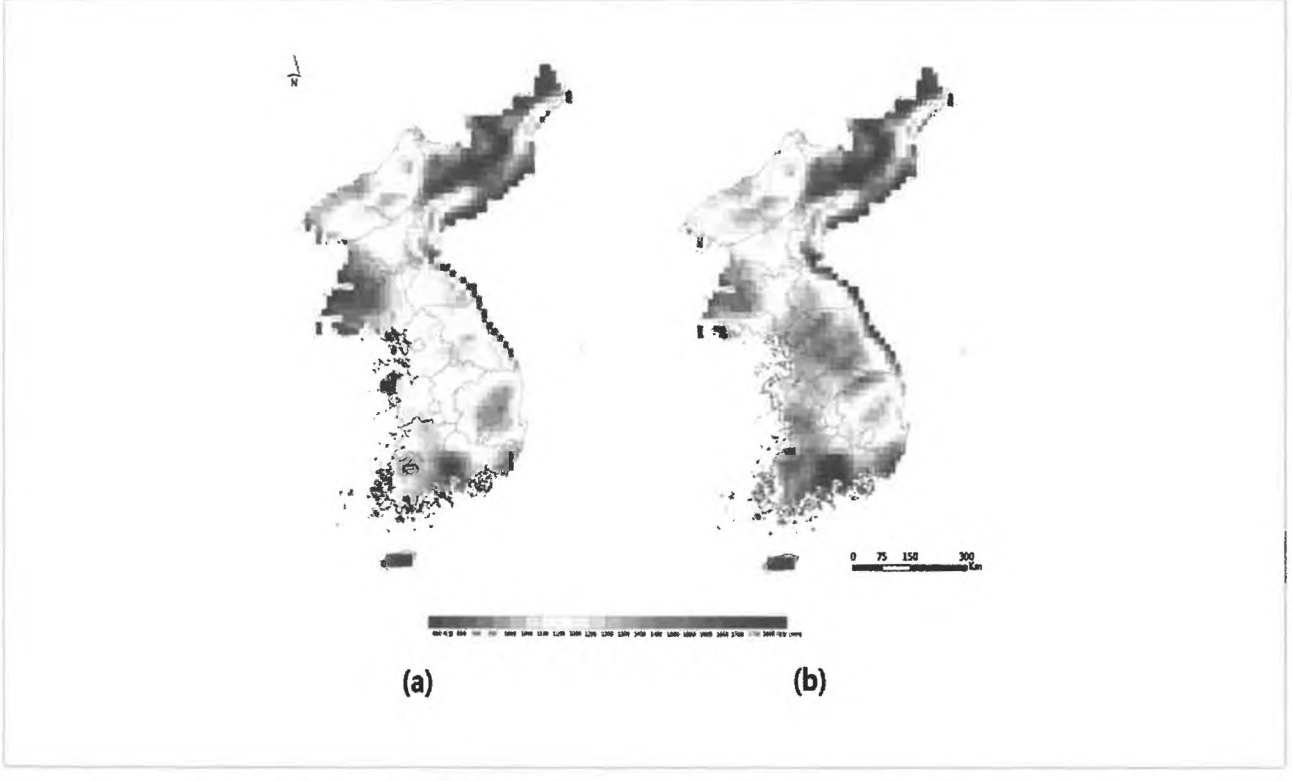

Figure 3. Projected rainfall change in Korea based on RCP 4.5
(a) 20112055 (b) 20562100

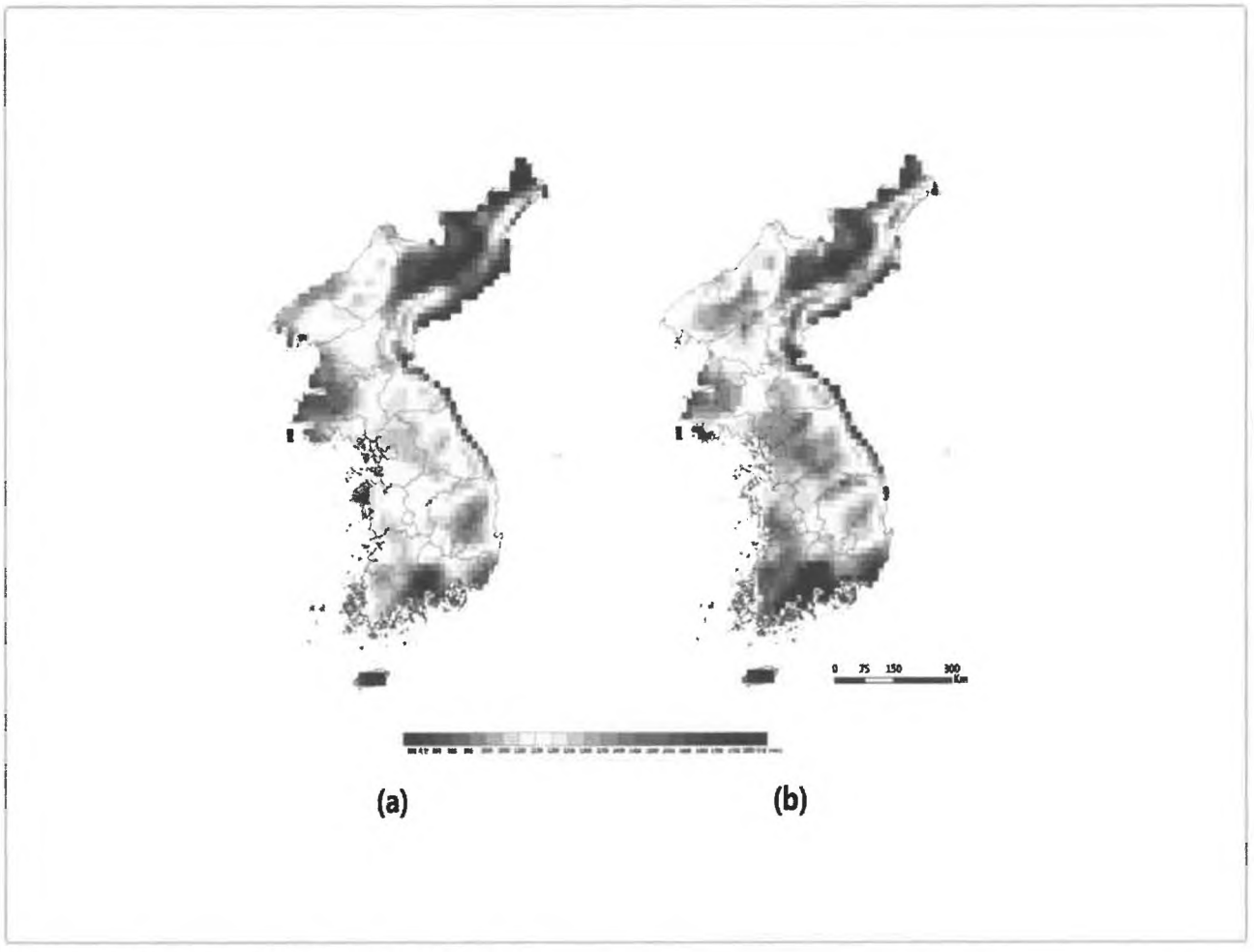

Figure 4. Projected rainfall change in Korea
based on RCP 8.5
(a) 20112055 (b) 20562100

2. Literature survey

Midorikawa shin et al. (2011) investigated the testing equipmentand method for the performance of water-retentive construction materials. They performed the evaluation based on the methods prescribed in the Precast unreinforced concrete products(JIS A 5371) and Appendices B.5.4.1 and B.5.4.2, and drew on these resources in determining the metrics to be assessed, including providing criteria for the temperature that the specimen must reachand the distance calculation method. They placed specimens in a 50 mm-thick insulatingcontainer and installed a wind speed device with an anemometer that could apply winds of 1, 3, and 5 m/s. They used a noncontact infrared temperature sensor to measure temperature, measured the weight changes using a scale,and heated the specimens by irradiating them with a lamp. The distance from the lamp to the surface of the specimen was defined as the point where the solar air temperature at the same height from the top of the specimen becomes 80℃. However, it is preferable that the distance from the lamp is based on the quantity of light used in the irradiation rather than the temperature, and that the measurement for the comparison among the specimens is carried out simultaneously.

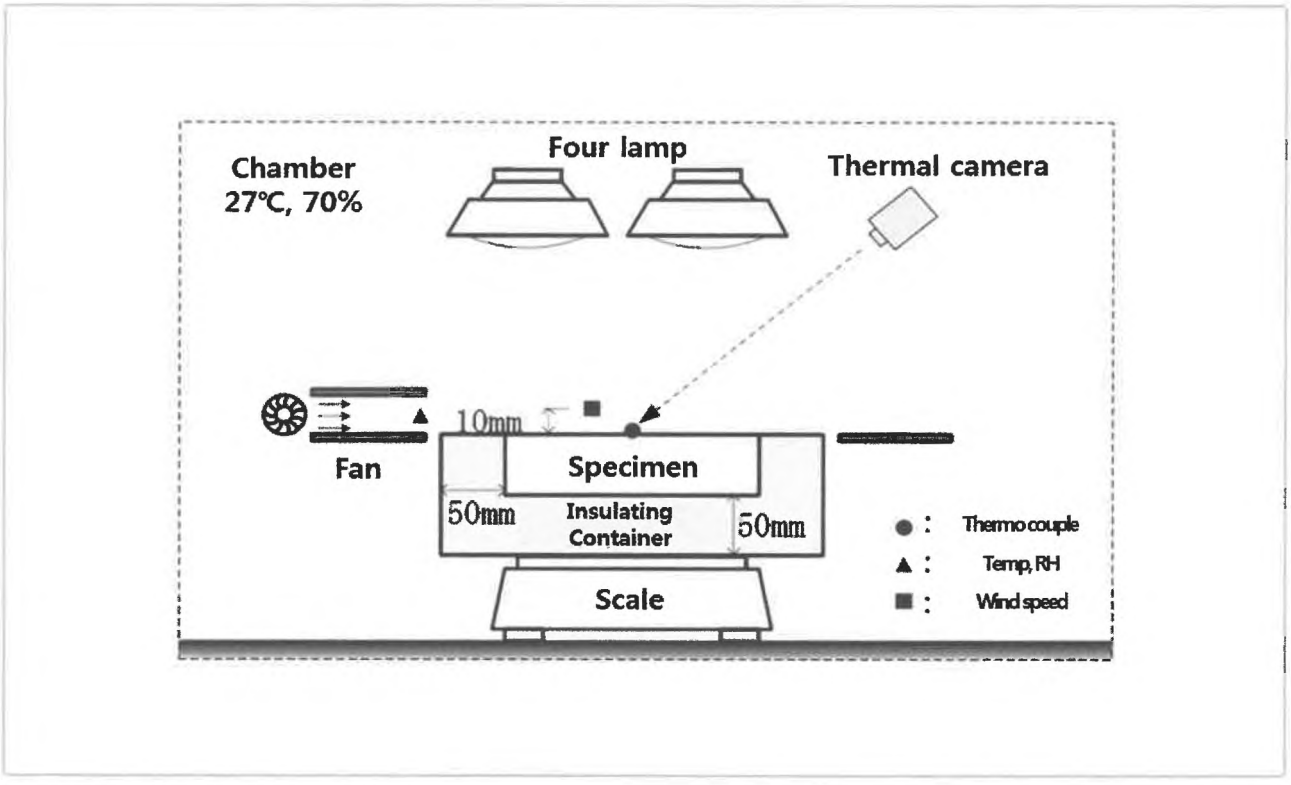

Figure 5. Surface temperature test

Dawa seo et al. (2016) evaluated the evaporation qualities of pervious blocks, using the following evaporation evaluation method. (1) After watering, the specimen is placed in a vacuum chamber for 24 hours to remove air ensure it is 100% saturated. (2) The sides of the core-type specimen aresealed with heat-shrink tubing. (3) The specimen is naturally evaporated at an ambient temperature of 23℃ and a relative humidity of 54% for 400 hours. (4) During natural evaporation, the weight of the specimen is measured with a scale (Fig. 5). Analysis indicated that most specimens initially evaporated rapidly for about 50 hours, and then the evaporation speed slowed dramatically. However, this study only measured evaporationand did not directly measure the mitigation of temperature, despite this being the most important factor. The equipment also suffered the limitation that the test was performed with the core only, which had to be prepared separately, instead of the whole block.

Wei Jiang et al. (2016) conducted a cooling effect test on developed block, using the following method. (1) The specimen is immersed in water at 20℃for 12 hours after which it is removed, and the surface is wiped with a wet cloth. (2) The sides and bottom of the specimen are insulated with polystyrene foam boards. (3) Three temperature sensors are placed at 30 mm intervals on the specimen's surface and the mean temperature of the sensors is used as its representative temperature. (4) The specimen is irradiated with a 300 W iodine-tungsten lamp located 500above its surface. (5) The temperature changes are automatically recorded using the installed temperature sensors. The measurement starts from an ambient temperature of 27.9 ℃, and the test space is insulated with polystyrene foam boards to minimize external effects on the measurement equipment. However, since the temperature environment is dominated by the lamp, only the surface temperature of the specimen was measured, and not the air temperature above the specimen. The lamp was set at the same height during the measurement and the illumination was not measured.

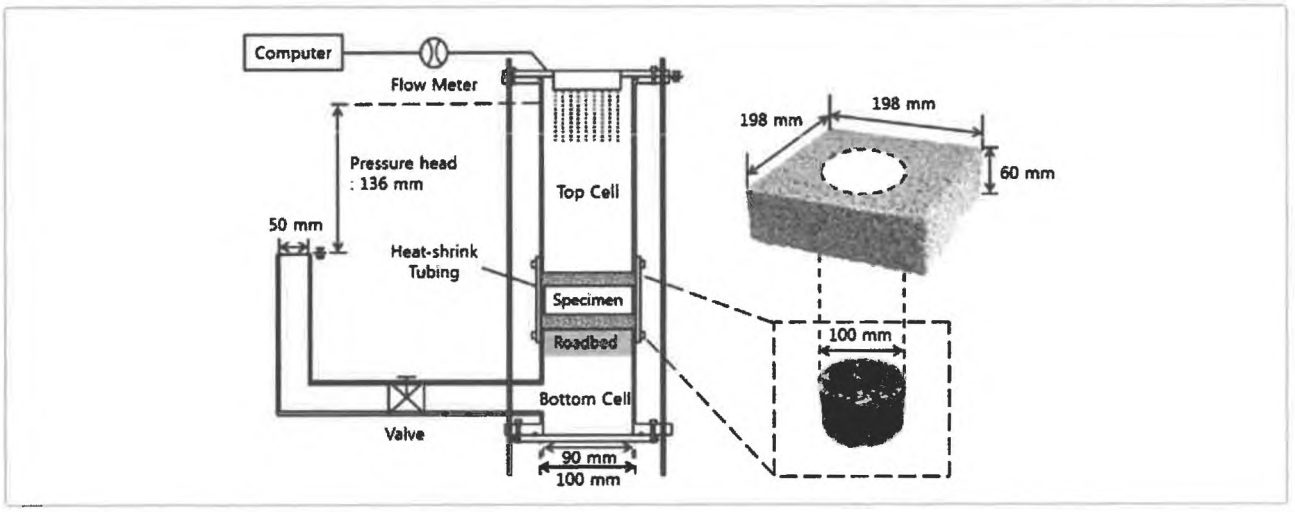

Figure 6. Evaporation testing equipment

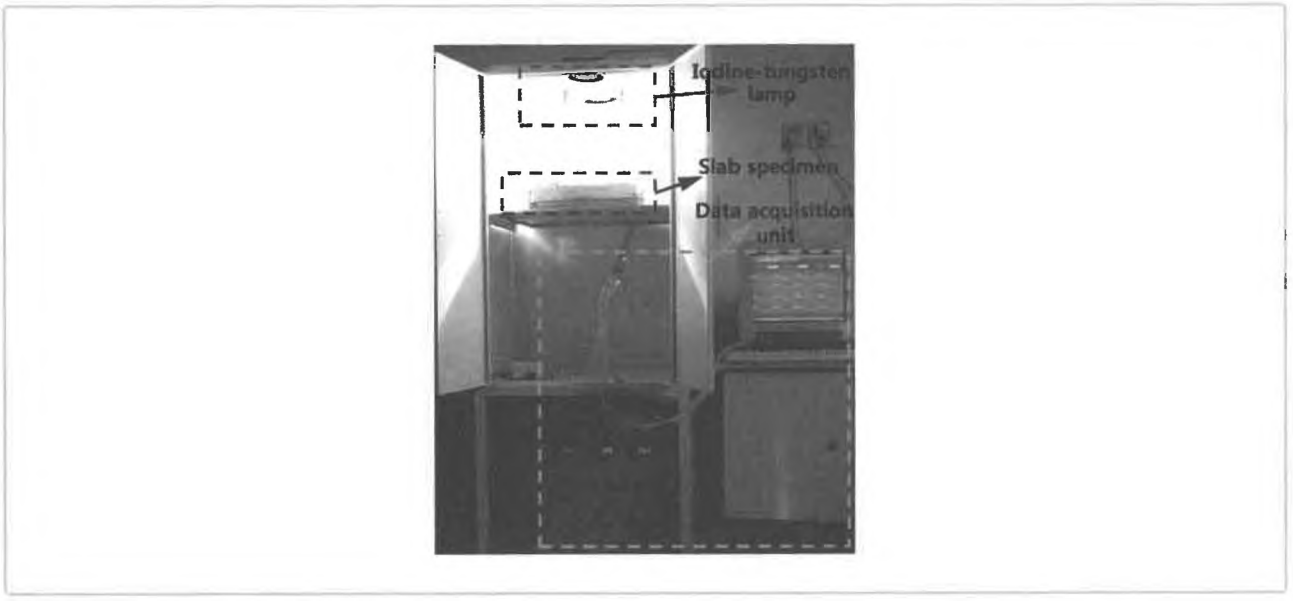

Figure 7. Indoor temperature testing equipment

3. Method

Informed by the review of the literature outlined in section 2, we developed testing equipmentto measure the surface temperature mitigation performance of road paving materials (Figs. 710). For the pieces of equipment proposed in the literature, the temperature and humidity, which are the external environment of the equipment, were either measured from specified starting points, or excluded the effect of ambient temperature. Due to the nature of road paving testing equipment, the lamp temperature is the strongly dominant factor, and the temperature inside the testing equipment also increases over time. If the volume of the equipment is small, the internal temperature will rise more due to the lamp than to the specimen, making it difficult to analyze the temperature rise attributable to the specimen. Therefore, it would be more appropriate to use a chamber with a large volume in which the environment can be well controlled,and place the equipment inside the chamber for evaluation, thereby controlling the external experimental environment and its effect on both the equipment and the specimen.

Another problem with equipment designs in previous experiments is that they measured the control and experimental groups separately, not simultaneously, and only controlled by identical irradiation time, with no control of other variables. Although some used up to four lamps, most studies used one lamp, which seems more appropriate for the comparison ofdifferent products. To measure the surface temperature of the specimen, they used infrared temperature sensors or thermocouples, but it is more appropriate to use infrared temperature sensors because when thermocouples are used, the contact surface may fall off due to the rising surface temperature.

Furthermore, the studies in the literature only measured the temperature at the center of the block, and did not measure the overalltemperature distribution. Since the lamp's light radiates in a circular pattern, local surface temperatures at different point on the block may differ. Therefore, our equipment was designed to select five points to measure local temperatures on the block.

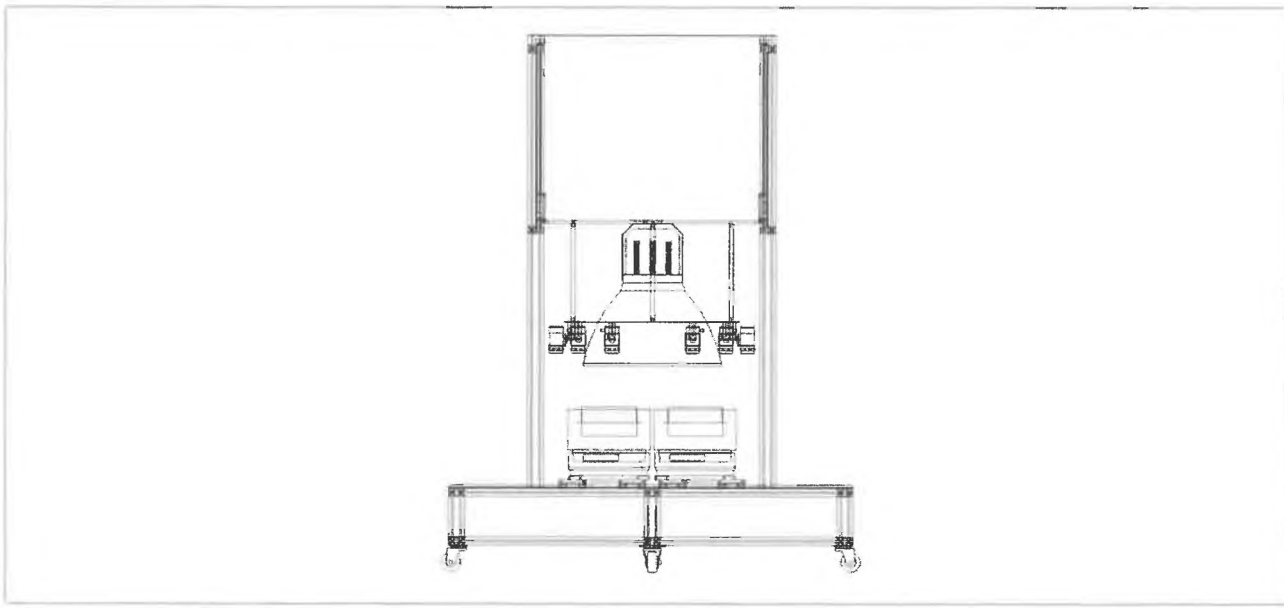

Figure 8. Front view of development equipment

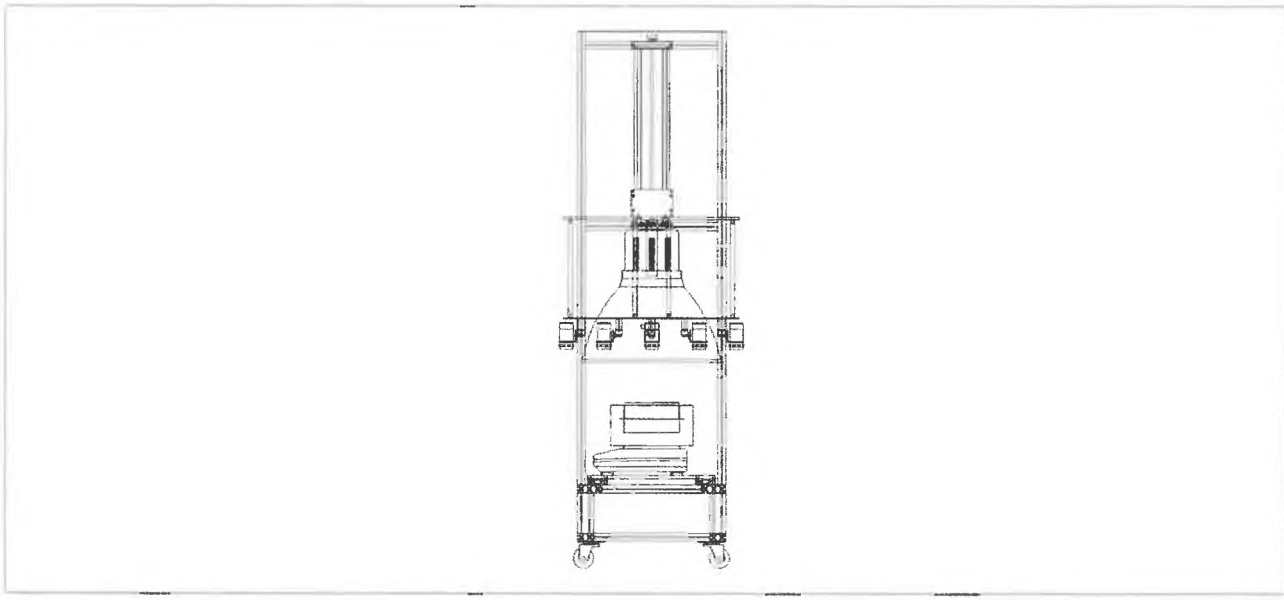

Figure 9. Right side view of development equipment

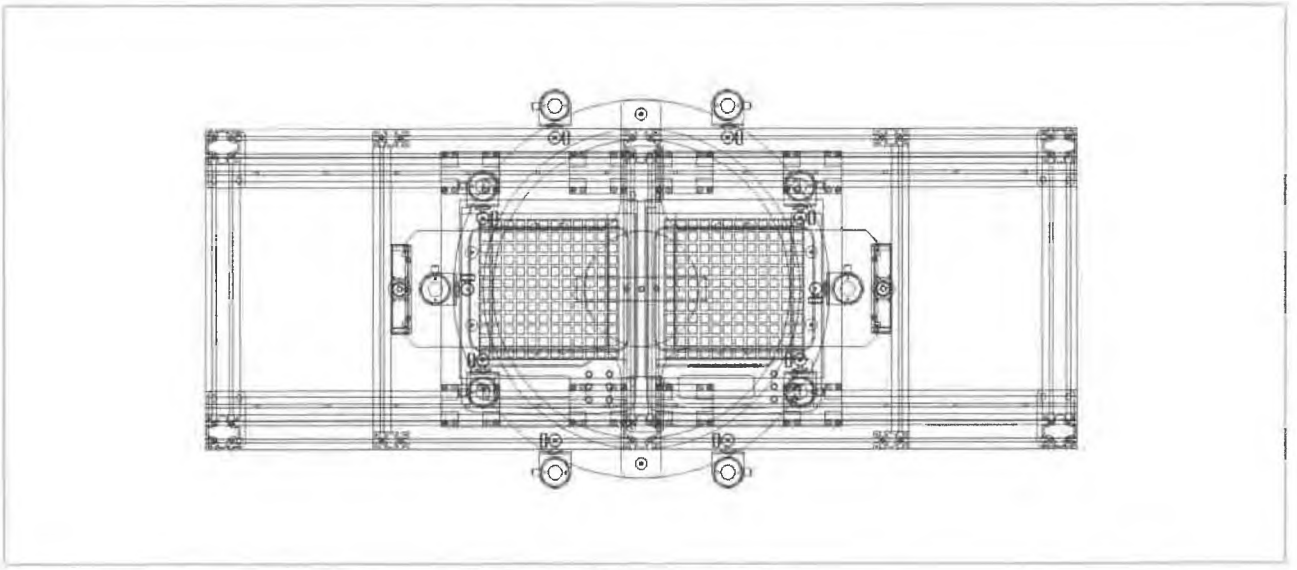

Figure 10. Plane figure of development equipment

4. Conclusion

This study reviewed and analyzed literature to develop testing equipment for measuring the surface temperature mitigation performance of road paving materialsdeveloped to cope with the urban heat island phenomenon caused by the increase in impervious areas resulting from urbanization. The equipment development and operation methods proposed in this study are as follows. First, the testing equipment must be operated in a space with a sufficiently large volume that the internal temperature and humidity can be controlled. If the volume is small, the lamp changes the temperature significantly, dominating the surface and internal temperatures andmaking it impossible to obtain the desired data reliably. Therefore, the equipment must be designed with a sufficiently large volume to allow appropriate distance between the lamp and the specimen, and facilitate the simulation of a stableexternal environment. Second, it must be possible to simultaneously measure both the control and the experimental groups. Variations in the equipment operation should be controlledas much as possible to simulate the same lamp output and environment so as to improve on previous studies which only applied the same testing duration and did not perform simultaneous measurements. The equipment developed in this study is, therefore, designed to enable simultaneous measurements. Third, for the surfacetemperature, the mean temperature reflecting local temperatures must be determined. Previous studies measured the temperature at the center of the specimen, but it is more appropriate to measure multiple points and determine their mean temperature because the temperature rise varies bythe location on the specimen affected by the light source. Therefore, the equipment is designed to select five points on each specimen for temperature measurement, and determine the mean temperature from these points.

This study designed and developed testing equipment for surface temperature mitigation performance of road paving materials, based on a review and critical analysis of literature detailing current procedures. In the future, various paving materials including dense asphalt and blocks, pervious blocks, water-retentive blocks, and heat-insulating paving will be assessed with the equipment developed in this study, to establish appropriate criteria for evaluating the temperature mitigation performance of paving materials.

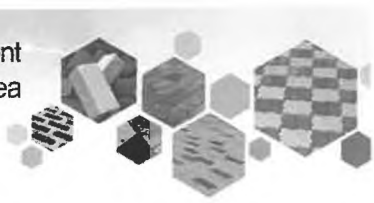

Acknowledgements

This work was supported by the Korea Environment Industry & Technology Institute (KEITI) through the Public Technology Program based on the Environmental Policy Project, funded by the Korean Ministry of the Environment (MOE) (2016000200004).

References

[1] Jong-Hwan Ko, A; Woo-bin Bae, B; Dae-uk shin, C; Yong-gil Kim, D. Performance evaluation of Evaporation and Air Temeprature reduction of Water-retentive block, the Architectural Institute of Korea 2017 Autumn Conference, 2017, vol.37, No. 2 571-574

[2] Jong Hwan Ko, Dae Geun Park, Yong Gil Kim, Sang Rae Kim, Performance Evaluation of Paving Blocks Based Ambient Temperature Reduction Using a Climatic Environment Chamber, Ecology and Resilient Infrastructure,2017 , Vol. 4, No. 4, 18 -192

[3] Midorikawa shin, A.; Hagihara shinji, B.; Fujimoto Tetsuo, C.; Murakami Tetsuya, D.; Kondo yasushi,E. 40324 Study on Performance Test of Water Retentive Materials : Part 2 Test Results, Consturction Material Test Center Construction Material Test Information, 2011, 687688.

[4] Dawa Seo, A.; Tae Sup Yun, B.; Kwang Yeom Kim, C.; Kwang Soon Youm, D. Time-Dependent Drainage Capacity and Runoff of Pervious Block Subjected to Repeated Rainfall Simulation, Journal of Materials in Civil Engineering, vol. 29, Issue 5, 2016, 040162731-0401627310

[5] Wei Jiang. A.; Aimin sha, B.; Jingjing Xiao, C. Alex Apeagyei, D.; Experimental study on materials composition design and mixture performance of water-retentive asphalt concrete, Constrcution and Building Materials, 111, 2016, 128138.

[6] National Institute of Environmental Research, Korea National Long-Term Ecological Research Project, The Third Stage Report(2010-2013) of KNLTER , Korea, 2014 pp. 163173.