9th. International Conference on Concrete Block Paving. Buenos Aires, Argentina, 2009/10/18-21
Argentinean Concrete Block Association (AABH) - Argentinean Portland Cement Institute (ICPA)
Small Element Paving Technologists (SEPT)

FLEXIBLE-BOUNDED BEDDING LAYER AS AN IMPROVEMENT FOR CONCRETE BLOCK PAVEMENT

MEINHEIT, Jens

SF-Kooperation GmbH, Beton-Konzepte, Postfach 77 03 10, 28703 Bremen, GERMANY.
Tel.: +49– 421– 69 35 380, Fax.: +49– 421– 69 35 399
info@sf-kooperation.de, www.sf-kooperation.de

Note: The following is the notation used in this paper: (.) for decimals and ( ) for thousands.

Summary

This document discusses the proposal for the introduction of a new construction method for bound pavement areas using a flexible bound bedding layer containing a blend of bitumen and sand. It describes the research of bound construction methods, which are produced rigidly and flexibly. In addition, it refers to a European research plan of third parties in which a construction method has been tested with a sand bedding of poor bitumen content. It presents the results from this research plan as well as the long time experiences gained so far.

Furthermore, the document describes why this concept is commercially viable, reviews the scientific tests carried out and identifies subsequent testing required for market launch.

The planned laboratory studies carried out will include testing the construction method of various kinds of base layers and concrete paving systems by defined wheel coasting of a 10-to-truck wheel in a road-testing machine. The results of deformation and shifting will be compared with other results of already finished tests of other construction methods.

1. INTRODUCTION - MOTIVATION

The SF cooperation is an international cooperation of leading concrete stone manufacturers. One of its main tasks is the development and improvement of products and methods for the construction of trafficked areas using concrete pavers. A major part of the research project is to ensure that the construction methods employed meet the long-term requirements of a construction project. This document aims to examine, challenge, and improve current practice.

In the following, we call the rigid construction method a paving construction method with bounded materials (mortar) in the joints, the bedding layer, and the base layer. Among others, it is also used for areas where the unbound construction method does not achieve sufficient durability. This includes for example highly loaded traffic areas, traffic roundabouts, bus traffic areas, industrial and special load areas.

1.1 Problems of bounded construction methods

The use of rigid binders in the joints and bedding material (e.g. cement mortar) result in a relatively high potential of damages due to construction failure from water infiltration. A problem especially in climate areas with regular rainfall and additional changes of freeze and thaw.

Even in Germany the rigid construction method results in many more known claims than in comparison to the construction method using unbound joint and bedding materials (conventional

construction method, flexible construction method) even though Germany has the largest paved areas per inhabitant in the world and much experience in the construction of paving areas.

Despite this and as demand for paving areas in a bound construction method increases there are no regulatory standards that exist in Germany.

1.2 Research of construction materials, methods and damages

The use of bound building-materials in bedding and joints of paving areas was tested. At the same time, numerous claims with bound materials were investigated. For the most claims three influential physical factors or their combination were responsible:

- Temperature.
- Rainfall.
- Traffic load.

The rigid construction method mainly uses cement-bound building materials for the joints and bedding material as well as the bedding layers, primarily because cement-bound building materials show high flexural modulus. These very rigid materials can cause high tensions from the effect of heavy loads.

Accordingly, in most cases very high requirements must be taken into account to have control of tensions within the paving, which result from temperature variation alone. At the same time, the derivation of penetrated rainwater must be guaranteed for climate areas with regular rainfall since even smallest cracks cannot be avoided for the rigid construction method. Penetrated water can damage the construction by dynamic traffic loads or by frost alone completely.

Due to these relatively high requirements, planning and especially installing paving areas with (cement-bound joints and bedding mortars requires a more intense design and installation, which in turn drives up time on site and project costs. Even the smallest of mistakes can often lead to great damages. This level of intensity causes the construction method to be so inefficient that other construction materials will often be chosen instead.

1.3 Approach flexible-bound

To avoid this high effort and to make high loaded traffic pavement areas more efficient, the combination of bound and flexible construction methods were looked at in further detail. The use of bitumen or building-material mixtures containing bitumen for the construction of pavements was classified as the market leading benchmark. Building-materials containing bitumen can be produced economically and there are high levels of experience and knowledge of bitumen in road construction.

Due to the flexibility of the building material and the small dimensions of the paving stones, no destructive tension can result from the temperature change so that we can exclude this influence factor. In addition, it is possible to make pavements waterproof or have a very low permeability with bitumen or building material mixtures containing bitumen, this would ensure almost all problems within the construction due to the presence of water can be excluded.

Water permeating into and/or through pavement constructions is considered a major cause of pavement damage in regions with regular precipitation.

Therefore, we can concentrate on the traffic load as a controlling influencing factor. For pavements, the base layer carries the substantial load transmission [1]. For high load pavements normally bounded base layers are built in, which have a higher bearing strength. However, in regions with regular rainfall these must allow water to permeate through the layers (porous

concrete, porous asphalt), which in turn leads to disadvantages in the economic efficiency of the pavement construction method.

However, unbound base layers must be compacted so strongly that sufficient water permeability cannot be guaranteed any more. Compacting by traffic load often decreases the permeability of the base layer. In combination with frost and traffic load, it frequently comes to damages of areas up to a total loss. It is therefore a main thought that no water should run into the construction by the means of a flexible bound construction method.

2. BLOCK PAVEMENT CONSTRUCTION METHODS USING BITUMINOUS MATERIALS

2.1 Adhesion of paving stones with thin-layered bitumen mass

This construction method includes the adhesion of paving stones on a bound bedding or base layer. The adhesion can be achieved through hot or cold workable bitumen in low layer thicknesses. The essays of Masao Inuzuka [2] [3] describes the binding (glue-like) effect and the insulation construction. The essay lists the advantages of the sealing efficiency for climatic conditions with regular precipitation and frost.

Amongst other reports the guide specification of the ICPI [5] as well as the essay of Sudip L. Adhikari [6] at the University of Waterloo are good reference documents that review pavements on a thin neoprene asphalt layer on top of a bitumen bedding layer. In the Concrete Crosswalks Research Project, different construction methods for pavements are compared with each other within two different test sections. The progress report #3 of the University of Waterloo [7] explains that the bituminous bound pavement is more durable in comparison to construction methods using unbound bedding on an impermeable base layer.

2.2 Filling the bedding and pavement joint with cement-asphalt-emulsion

The essays of Takuo Tamaki, Yoshitaka Echikawa, Takahiro Yamamoto [4] explain the cement-asphalt emulsion of a certain mixing ratio that can be applied coldly and is able to flow.

With this cement emulsion mixture a pavement bedding from a cavity rich granulate structure as well as the joint are then sealed or injected to a compact system.

2.3 Bedding layer from bitumen sand mixture

Another suggestion also deals with a bedding layer containing bitumen, however with a small bitumen amount. Within the scope of a European research project [8] a construction method was developed to target the production of waterproof pavement surfaces. These should be built over base layers consisting of recycled building material with possible water-polluting substances.

A bedding layer from a sand bitumen mixture can cause impermeability. The following, section offers further explanation into this approach.

All suggested possible construction methods above included observation periods of one or more years. All showed that the use of bitumen as a flexible binder leads to better performance characteristics when compared to using rigid materials e.g. cement-bound materials.

3. RESEARCH PROJECT FOR BITUMEN-SAND BEDDING

The demand for an economic construction method for impermeable pavements created the basis for a research project in 1995. Because of the increasing use of recycling building-materials and other building-materials, which possibly had contents harmful for the environment, unbound pavements could not be installed anymore because they are more permeable to water compared to other road surfaces and could pollute the groundwater with harmful substances by seep water.

3.1 Description

The research project determined a suitable material and a simple installation method for the production of an impermeable pavement. Five concrete manufacturers and two scientific institutes worked in the research project. Based on the unbound construction method they set the following targets for the new construction method:

- Water-impermeability.
- Same or higher load-capacity.
- Resistant to climatic conditions (temperature, humidity).
- Climatically independent installation.
- As little changes as possible to the unbound construction method.
- As cost-neutral as posible.
- Availability of building-materials and construction equipment in all European countries.
- Simple construction workflow.

Preliminary studies tested the use of bitumen as a flexible and sealing binder for the bedding sand. Within the first two years, different materials were tested and evaluated for joint filling and bedding layer in numerous laboratory and simulation tests. From the laboratory tests, those materials with the lowest water permeability, the highest stability and a good processibility were selected as reference materials.

For the determination of a suitable joint sand special requirements had to be taken into account since the water impermeable bedding material can cause a slack flow in the joint area. As reference material a natural sand of certain granulates distribution was used for which the characteristics of a low water permeability and high stability were explored.

In the following, the technological conditions for the installation or the construction workflow were found out with the selected materials in a test area in the original scale. Best results were achieved if the bedding material is installed in the hot installation with an asphalt-paving machine without compaction. However, a manual/hand installation is also possible, as discovered through a subsequent, parallel test site. Further steps are equivalent to the conventional paving construction method.

The test sites were tested under real conditions, mean exposed to traffic overrun and outside conditions corresponding to natural weather conditions for an 18-month period. Continuous measuring monitored the water permeability as well as the deformation of the surface of the test fields. For two of the three test sites sections were prepared so that penetrating rainwater could be captured and collected to measure quantities. Other parameters, which took influence on the water permeability and deformation, were continuously measured, and recorded, these were:

- Traffic load.
- Precipitation.
- Air temperature (highest and minimum temperature) and
- Temperature of the bedding layer (highest and minimum temperature).

The traffic volume was determined at two test sites by photocells and at one by quantity of the production. Weather stations next to the test sites captured the climate data. A built-in thermometer measured the bedding temperature.

3.2 Monitoring results from test sites

3.2.1 Water Permeability

Monitoring identified that one of the main project targets, preventing absolute water ingress into construction layers, was achieved only during laboratory testing but not in the live test sites. The water collected at two test sites was compared to the total rain amount in the 18-month period and is represented as proportional share. However, the quantities of penetrated water, which seeped into the construction, were so low, that there is little concern with regards to damage by traffic load or frost. It is noted that some European countries tolerate the seepage of such small rain amounts through recycling base layers; and so on, this low seepage was not deemed an issue. Table 1 represents some of the data from the test sites.

Table 1. Overview of some data of the test fields.

	TEST FIELD I	**TEST FIELD II**	**TEST FIELD III**
Total area / driving area	950 m^2 / 560 m^2	1 000 m^2 / 400 m^2	8 25 m^2 / 300 m^2
Traffic amount [vehicle]	167 000	225 000	71 000
Traffic load	Mixed (forklifts, trucks)	Forklifts	Forklifts with solid tyres
Axle loading [t]	Unknown	1.3 to 4	3.4 to 13
Total rain [mm/m²]	1 200 mm/m^2	924 mm/m^2	770 mm/m^2
Air temperature min. / max. [°C]	-11°C / 32°C	-12°C / 38°C	-16°C / 36°C
Bedding temperature min. / max. [°C]	-6°C/ 40°C	-2°C / 33°C	-5°C / 27°C
Base layer	300 mm Recycling	600 mm Recycling + 300 mm Crushed natural stone	600 mm Recycling
Block thickness	70 mm	100 mm	100 mm
Deformation, average / maximum	7 mm 50 mm *	5 mm 15 mm	10 mm 30 mm *
Surface gradient slope	0.2%	3%	-
Average value of share of seeped-in water of the total rain	4.3 % **	0.06%	-

* The layers below the bedding layer mainly caused the deformation. Base layers were mainly produced from recycling material and in various thicknesses depending on the test area. When checking the bedding thickness at the deformed areas after end of the testing period hardly any change in the bedding thickness was noticed. Also, a very well reciprocal correspondence (low base layer thickness = high deformation) was noticed for the maximum deformations and the corresponding layer thicknesses of the base layers.
** Due to a few heavy rain occurrences (up to 120mm) and a very low surface gradient slope (0.2%) on test site I other inflows led to a long exposure time of the water and in turn to a relatively high infiltration.

3.2.2 Increasing the stability

In order to make sure that the bedding layer containing bitumen did not lower the load capacity, the static deformation module was measured at one of the testing sites with an unbound bedding layer and a bedding layer containing bitumen. Measuring was done in accordance to the Danish method SV L&P as a static deformation module. The layers below the bedding layer were identical for both tests. As expected, the result was an increase of the load capacity for the bedding material containing bitumen.

4. EXPERIENCES WITH THESE CONSTRUCTION METHODS

The oldest site using construction method is approximately eight (8) years old (see Figure 1) and is still in good condition and subject to industrial traffic load. Other sites, which have been constructed after the end of the research project, are between one (1) and six (6) years old and also in good condition. They have been built for various applications such as bus traffic (see Figure 2), wheel loader, waterproofing layer for pollutant above the pavement and others.



Figure 1. Section of the first test site with the highest load concentration by forklifts with solid tires, (eight (8) years old, average 100 forklifts per day).



Figure 2. Block pavement on a impermeable base layer (CTB) with bus traffic, three (3) years old (60 busses per day + public traffic).

Figure 1 shows the output point of a production line for concrete paving stones at the plant at of a concrete manufacturer. After 6 years there is no significant damage, despite the fact that the area is exposed to high wheel load by forklifts with full rubber tires has a strong impact (medium value approx. 100 forks per day, loading axle; load empty 3.4/ loaded 13 t).

Figure 2 shows a bus stop in a public road built with a flexible bound construction method with bedding sand containing bitumen. The previous installation method used unbound paving construction, because a water impermeable base layer (CTB) was installed underneath the bedding. The area was reconstructed with bedding sand containing bitumen with the flexible bound construction method. The renovated area has already outperformed the life span of the previous method and still is in good condition.

5. ADDITIONAL TESTS WITH MODIFIED MATERIALS

The research project performed tests with bedding material built in while hot. The built areas were also constructed with the hot installation procedure so that here positive experiences were gained.

For a wide market launch of this construction method, smaller construction sites would require a simpler procedure without the need for hot installation. In order to ensure maximum market penetration using this solution, modifications to the bedding material containing bitumen is required along with further tests.

The plan is for the production of a bedding material that can be installed in a cold format whilst maintaining the same or improved characteristics as that of the hot applied bedding material. The differences, disadvantages, or advantages of the cold installation shall be recorded and challenged. After modification of the construction materials tests shall be performed in reference to the characteristics of the modified building materials through full-scale laboratory tests. These tests will be performed according to strictly scientific requirements and shall expand the knowledge about the procedure.

For this, the Ruhr-University Bochum was commissioned to perform several tests with the road-testing machine. With the road-testing machine, the differences between unbound bedding and the bedding containing bitumen shall be tested in reference to deformation and shifting at absolutely the same conditions by rolling over of a truck wheel with a 5 t wheel load (10-t-axle load). Numerous pavement products and constructions were tested so that the comparative results are available for cross-referencing. Along with results from other research projects, this would allow for a thorough analysis.



Figure 3. Photo of the Street Testing Machine of Ruhr University Bochum.

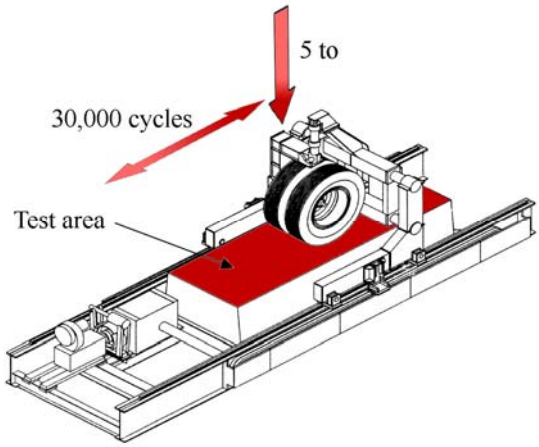

Figure 4. Schematic representation of the Street Testing Machine of Ruhr University Bochum.

Test sites using the modified building materials are also planned. Here at first renovations will be performed where base layers below pavement areas became water impermeable subsequently. When renovating with the flexibly bound sealing pavement construction method it is not necessary to exchange the base layers as shown in Figure 2 as an example. This causes a high cost advantage of this construction method. Without this sealing, the base layers would have to be exchanged for the unbound pavement construction method or other waterproof traffic area pavements would have to be built in.

6. CONCLUSION AND FORECAST

For the construction of pavements, climate areas with a regular rainfall require water permeable base layers. This can lead to disadvantages for the construction of high load pavement areas.

For high load pavement areas unbound base layers must be compacted so much that there is the risk of sealing the base layer. In this case, the rainwater that seeps through the joints into the construction cannot drain sufficiently any more. In combination with freeze and thaw and traffic load, pavements are frequently damaged. If bound base layers are planned (porous concrete, porous asphalt) these usually loose to an economic comparison with other traffic area pavements.

Construction methods with flexible bound bedding layers seal the area above the base layer, helping to alleviate problems of water ingress. This method is economically viable and at the same time has advantages when compared to other construction methods. Advantages such as; an increase in stability of the pavement area for the horizontal loading and it prevents long term concerns about damage to base layers due to water penetration if they became water impermeable.

There are promising experiences in reference to this construction method from different approaches. A construction method which is already successfully in use and which is very close to the traditional pavement construction method shall be modified for cold applications to ensure easier handling on pavement construction sites. The modified materials shall be tested in comparing and strictly scientific laboratory tests and will be validated by test fields. These results will be available for the conference.

The main objective is to establish a flexible bound construction method, which in comparison to other pavement construction methods will be simpler, more economical, and durable for the installation of pavement areas on waterproof base layers and for high load traffic areas such as inland ports or seaports, container-handling sites, also in regions with a regular rainfall.

7. REFERENCE

[1] REHBEIN, K.-H., 1988, "Untersuchungen zum Lastverteilungsvermoegen von Betonsteinpflasterdecken", Schriftenreihe des Institutes für Strassenwesen und Eisenbahnbau der Ruhr-Universitaet Bochum, Germany.

[2] INUZUKA, M., SATO, I., 1984, "Concrete Block Pavement on Asphalt Highways", Proceedings of the 2nd International Conference of Concrete Block Paving, Delpht.

[3] INUZUKA, M., 1988, "Adhesive Layer for Overlay with thin concrete blocks", Proceedings of the 3rd International Conference of Concrete Block Paving, Rome, Italy.

[4] TAMAKI, T., ECHIKAWA, Y., YAMAMOTO, T., 2000, "A new Roadway Block Pavement Constructed by Cement-Asphalt Emulsion Grout", Proceedings of the JIPEA World Congress 2000, Japan.

[5] ICPI, 1995, "ICPI-72 Bitumen set pavers for pedestrians & vehicles", Information from the Interlocking Concrete Pavement Institute, Herndon, VA, USA.

[6] ADHIKARI , S. L., 2008, "Structural Performance Evaluation of Interlocking Concrete Pavement Crosswalk Designs", University of Waterloo.

[7] TIGHE, S., ADHIKARI , S. L, 2008, " Concrete Crosswalk Research Project", Progress Report #3, University of Waterloo.

[8] BRAUN, A. ET. AL., 2001, "Final technical report of Brite/Euram project" – unreleased.