ON FUNCTIONAL BLOCKS COVERED WITH RUBBER PIECES OF DISCARDED TIRES

Masao Inuzuka

Professor Emeritus of Hokkaido Institute of Technology
Masamo Enterprise Co. Ltd.
6-14-2-3 Maeda, Teineku, Sapporo, Hokkaido, Japan, Postal Code 006-0816
Tell: 81-11-685-8987, Fax: 81-11-682-8502 E-mail: masamo@i.bekkoame.ne.jp

SUMMARY

This paper is about blocks covered with rubber pieces. The proposed is to cover paving blocks with rubber pieces excised from automotive tires to achieve functional blocks to enhance the use of a road. The combination of paving blocks with the discarded tires solves not only traffic problems but environmental ones in processing the social waste. The pieces are not made of shredded tips so that a variety of merits come up. Sparing the procedure of shredding and solidifying, the drawbacks in the conventional methods may be solved. Being promising, the practice remains under development so that the drawbacks found are discussed, based on past experiences and laboratory experiments. The connection here proposed is dependent on not only the asphalt adhesion but the shape fitting to one another to increase the strength in the motorway conditions. Thus the feasibility of the practice is discussed from the view points of four basic points as follows; a) the life time of rubber pieces b) noise level reduction c) skidding resistance in wet conditions d) the separation of surface pieces. The experiment consists of two parts. One is the comparison of the noise levels between the kinds of paving. Another is on the friction coefficients of tire treads in wet conditions. As to the separation, the designs of the blocks are discussed with the data obtained in the past trials. These results show that the functional blocks, not yet completed, may have the potential in a variety of applications to prevent skidding on ice, noise reduction and the solution of heat island.

1. INTRODUCTION

This study centers on the feasibility of functional blocks with rubber pieces attached such as ones excised mainly from discarded tires of automobiles. Rubber pieces thus available are unique in a sense that their prices are minus, though physical properties have merits such as high strength... Therefore these have been tried for surface layers of roads in order to reduce noise, echoing sound, abrasion, ice formation, black ice etc. In the conventional method, discarded tires are shredded into rubber grains which are then solidified to make a plate with the bonding agent. This is because the thicknesses vary at random so that the uniform sizes are available after shredding. The durability of the solidified plates of rubber grains would drop considerably from that of the tire rubber so that usually these have been used only for pedestrians, not for roads of automotives.

A method was proposed to make blocks for motorways, using discarded tires for the surface piece without shredding. Using blocks enables us to limit the rubber area only on the driving lanes, solving problems in holding rubber pieces on the road surface. Sparing the two procedures of shredding and solidifying contributes to the economy of the practice. Though it may have merits, the short history shows the lack of fundamental information, raising questions. The answers are tried as to the followings: the wear due to the traffic, the skidding in wet conditions and the improvement of the noise reduction.

Regarding the durable adhesion to hold rubber pieced on the blocks, the characteristic behaviors of the surface pieces are discussed with the cases in the past, comparing these with ones in the trials. A particular point of separation may be the adhesion in connecting the surface piece with a concrete body. It was proposed (Ref.1) to use asphalt for the adhesive layer, which proved to be a panacea to hold almost any kind of surface pieces on blocks.

Rubber pieces, however, have required improving the adhesive durability, since the adhesive strength had little to do with the resistance against separation. The durability can increase by preventing the horizontal shift. Thus the specific fitting shape of blocks and pieces is introduced. When the rubber pieces can be connected firmly with concrete, the functional blocks are applicable to a variety of cases. Then the deicing system is used not only in winter but in summer seasons to prevent the heat island phenomenon. Even the insulating walls against the traffic noise may be spared by silent blocks. Illegal dumping may vanish when discarded tires are of any value.

2. ABRASION

Information about the abrasion between tire tread rubber and rubber on the road surface is difficult to obtain in the publications and the documents. An approximate test may be found in data of the subway in Sapporo, since the wheels have rubber treads and run on the resin plates. The diameter of the wheels is either 90 or 100 cm. The tire is used up to 300 thousand km, abrasion hardly discernable, according to the controlling office. The rubber on one lane may survive for over 50 million vehicles or even several times more in similar conditions except specific locations such as the intersections.

This means that it takes over ten thousands days or twenty seven years to make the rubber worn even if the automotives passing on a block are five thousands in a day. This may be extraordinary, since the traffic density in one lane is usually divided by several blocks. Also the blocks are easy to replace if the abrasion might cause problems. Accordingly the rubber abrasion due to the normal traffics may not be a serious problem.

3. NOISE

Although the rubber blocks are known to reduce the traffic noise due to rolling tires, the measured data were scarce. Therefore noise levels were tested about specimens to compare the results in the same conditions. A cart ran at 1.0 m/sec. on a given length of testing surface. The sound was recorded by a portable tape recorder. The outlook of recording procedure is shown in Figure 1. The recorder was played in a noiseless room to measure the levels in decibels by the impulse noise meter of RION MS-61. The results are shown in Table 1.

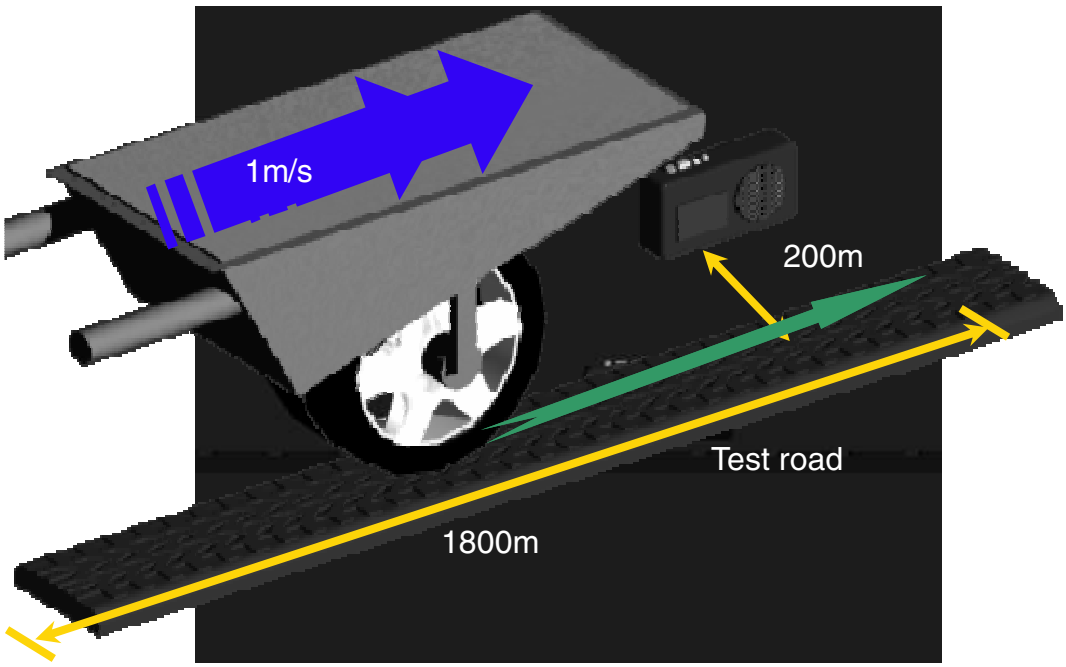

Figure 1. Outlook of recording on specimen surface

Table 1. Noise Comparison in db

	1	2	3	4	5	6	7	8	9	10	Average
ILB Road	96	95	96	98	94	93	94	94	95	95	95.0
Asphalt Road	95	94	91	93	91	91	93	92	93	95	92.8
Concrete Road	87	91	90	91	89	90	93	91	89	94	90.5
Rubber piece of stud less tire	87	89	89	90	91	90	90	91	87	88	89.2
Rubber piece of normal tire	85	87	87	84	86	87	85	87	86	88	86.2
										unit : d b	

4. SKIDDING

The experiments are designed on the coefficients to reveal the influence of wet conditions as well as the patterns of the surface pieces. Four levels of wet conditions are set as the dry, sprayed, soaked and the submergence. The notch depths of tread are given by choosing the pieces according to the wear levels in use. The braked lorry on specimens was pulled at the same speed by a hand jack until it begins to move. Specimens were laid in the ditch as shown in Figure 2.



Figure 2. Outlook of test on friction coefficients



Figure 3. Specimens in given wet condition

The wet levels were controlled by the water depth, as shown in Figure 3. The frication coefficients thus derived are shown in Figure 4. The results show the influence of both the wet conditions and the tread patterns. This suggests that the joints might work similar to the tread patterns to keep the coefficients. The joints are also to flush water to prevent hydroplaning.

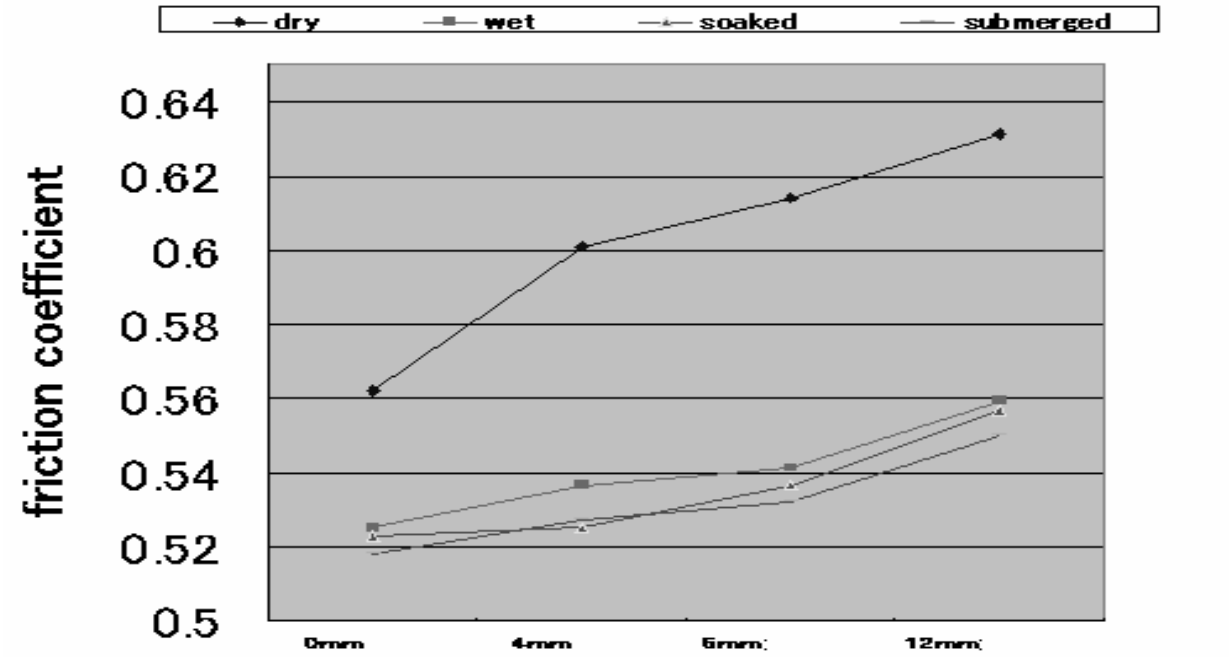

Figure 4. Relation between friction coefficients and notch depth of tire tread

5. PRODUCTS

5.1 Rubber separation

The pieces from tires are unique as a material not only because of the random sizes but also the mechanical behaviors of shape memory. The inner surface is finished with a chemical agent for removing the form when produced originally. Thus the bond to concrete with an ordinary adhesive is not strong enough for a road so that separation was common in the past trials. The main cause was misunderstood that the adhesive strength was insufficient. Even special chemicals were not able to prevent the separation, though the adhesive strength of these was far higher than that of concrete.

Then physical or geometrical connection was introduced, holding the rubber piece with the undercut shape to reduce the separation rate. Arranging the rubber pieces must be carried out without halting the machines. Therefore both edges of a rubber piece were shaped to be encapsulated by concrete. Though this improved the rate, the recovery of shape memory made a gap in-between and caused the separation in the service, as shown in Figure 5. The more the rubber pieces are curved, the sooner the separation would take place, because the block machines pressed these to flatten in the process. Unless the rubber pieces are left flexible in the process, it might be difficult for the current block machines to complete the blocks free of such separation.

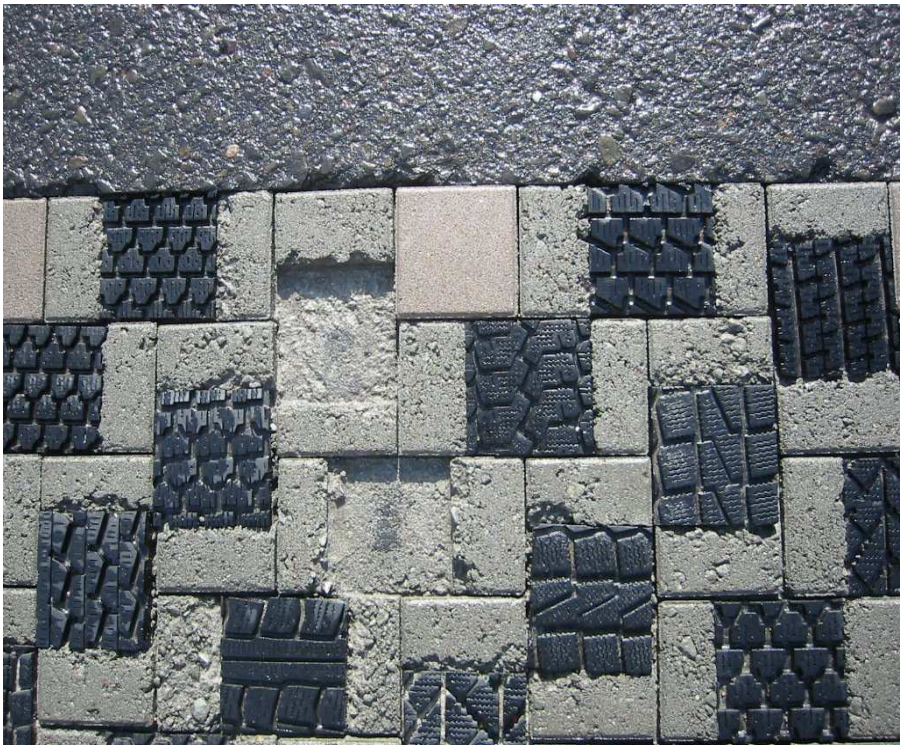

Figure 5. Connection with encapsulation

Consequently the combination of asphalt and the shapes to fit to one another are introduced. The asphalt adhesive is strong enough for the normal tension, but not for the tangential stress. In order to prevent the separation, a variety of designs were tried with the partial encapsulations as shown in Figure 6. An asphalt adhesive is not strong in adhesion, compared with other bonding agents. An asphalt adhesive, however, enables to prevent the hollow due to the deformation and per se deforms, accommodating deformation. Trials showed that an asphalt adhesive was durable to hold blocks in motorways, so far as its tangential deformation is constrained or limited, since the adhesion recovers in the meantime. The rubber part can be divided into pieces, since smaller pieces would deform less and the recovery rate becomes higher.

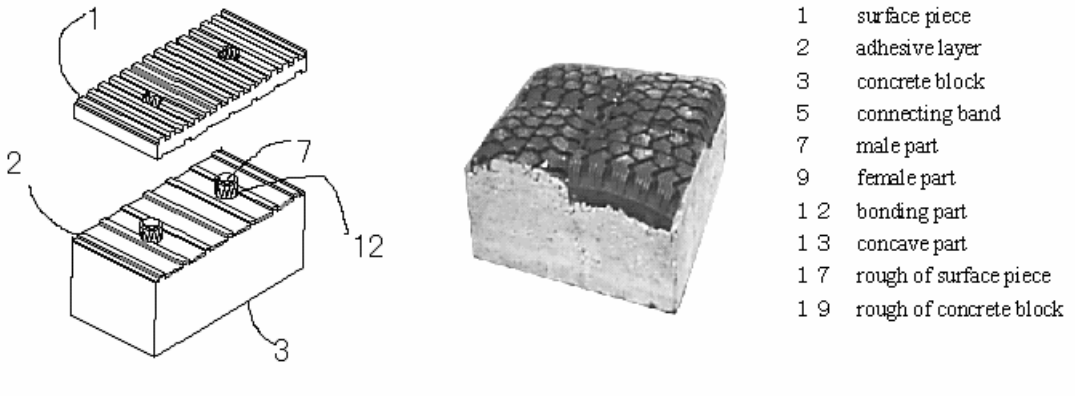

Figure 6. Connection with asphalt and encapsulation

5.2 Combination

The combination of asphalt and the fitting shapes is a key to the durable functional blocks. Since the current block machines would deform the rubber pieces, the procedure might be divided into three

independent steps - producing a concrete body, processing rubber pieces and combining these. The concrete body ought to have a dent to hold rubber on the surface. Adding to a pair of projections on the rubber surface, the block is completed as shown in Figure 7. The total height can be adjusted either by the asphalt thickness or concrete height. The cost of a flattened rubber piece may be between 70 cents and three dollars in Sapporo depending on the size of a lot. Arabic numerals, here on, mean the same as in Figure 6 or the previous figure. Steel in the surface pieces seems advantageous not only for strengthening these but also for handling with the magnet.

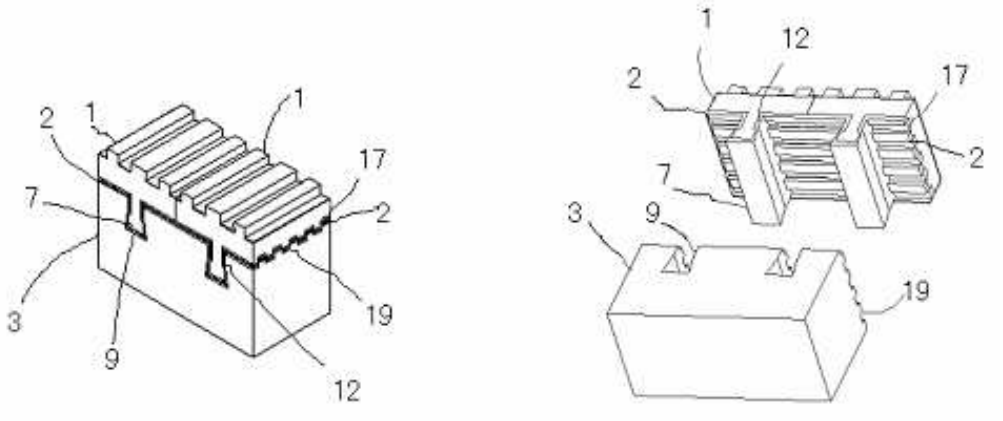

Figure 7. Combined block and parts

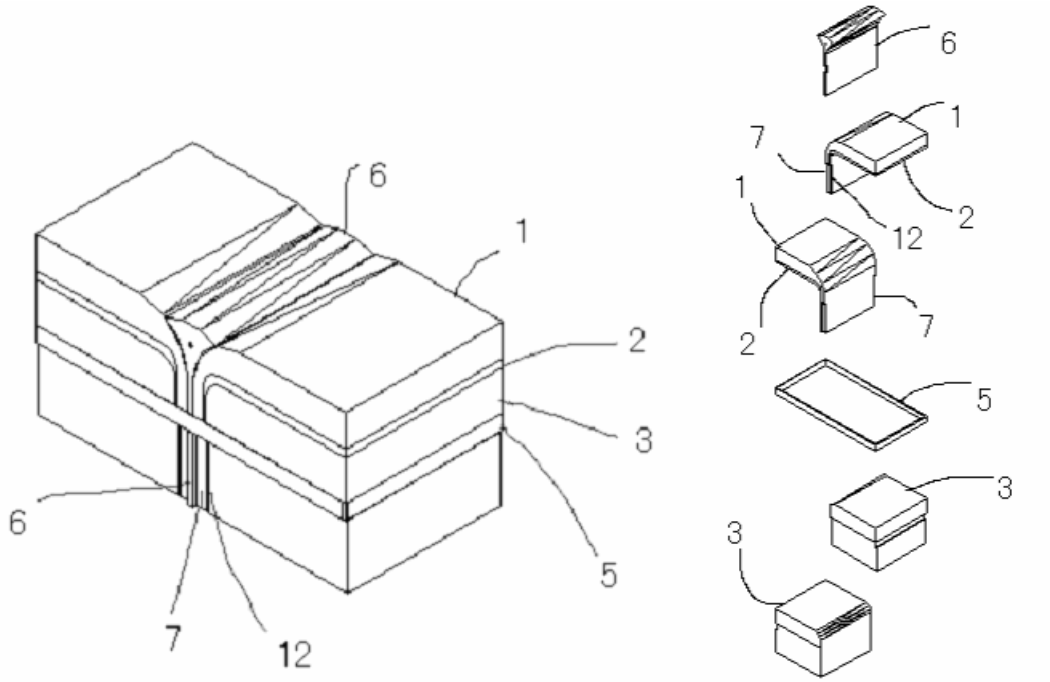

Figure 8. Banded block and parts

Economical rubber pieces are available, simply dividing a discarded tire into 32 equal pieces. One rubber piece costs less than five cents in Sapporo. The processing system and the facilities may be improved further. Steel makes it simple to handle to arrange these with magnet. The surface pieces of any material can be connected to iron parts to simplify the process with magnet. A hoop with a bead wire may be used to bundle blocks into a patch for the functional paving.

Therefore the tire processing machines are to preserve these merits, although the mass production is the key to economy of the products. A block with the pieces is shown in Figure 8. Each rubber piece has a tread part and the side wall parts, as shown in the parts section in the right. Concrete consists of two pieces, banded by a band, which is made of either metal or plastics. The asphalt adhesive can adjust the height of a block, filling the discrepancy in-between, if it is small. When it is over the limit, the bottom surface of concrete can be rough to adjust the height with concrete.

6. FUNCTIONAL BLOCKS

Rubber pieces being durable, the applications can be extended to a variety of functions.

6.1. Ice removal

The functional blocks have so far been constructed mainly for reducing the skid accidents on ice, since ice would disappear quickly on the rubber pieces, being removed or cracking by the repulsion. A hollow, filled with soft rubber under the piece, can enhance the repulsion, as shown in Figure 9.

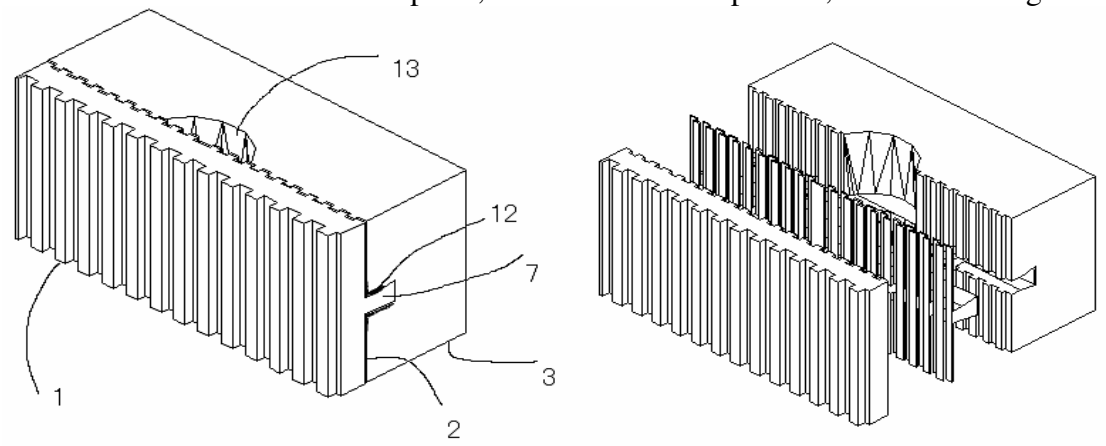

Figure 9. Ice removing block

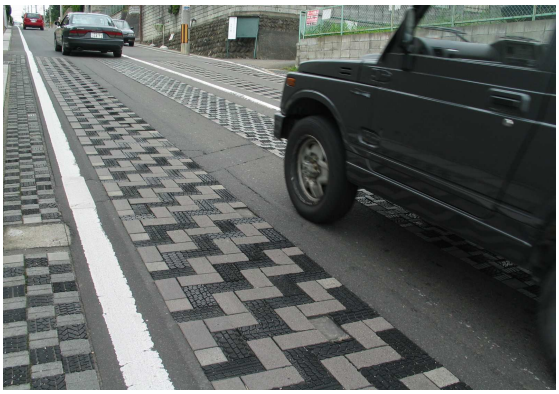

Figure 10. Rubber blocks against skidding in slope

Still the heavy snow must be removed by machines. It was required to prevent any damage by the snow remover. Therefore the concrete surface blocks were placed alternately to guard the rubber pieces on blocks . This arrangement contributed not only to prevent the rubber separation due to the machine but to keep the friction coefficient satisfactory even on a slope, as shown in Figure 10.

6.2 Spreading system

This system was originally for spreading deicing liquid on the road (Ref.2). In winter, this system spreads deicing liquid on the road surface. It may make an effective countermeasure against the heat island in summer. Replacing the deicing liquid with water, the system can spread water on the road, cooling it in accordance with the traffic volume. An outfit for watering is shown in Figure 11. The surface level of water might be just below the rubber surface so that the tires get wet, sinking by the weight. As water decreases due to the momentary overflow or evaporation, its surface level is kept constant, supplied from the air tight tank automatically. Together with influencing factors such as the road surface, climates, water depth, the treads of driving vehicles are to spread water for a distance, covered by one system. The traffic volume being over two thousands a day, one system may cover over a hundred meters with the tires of the automotives, passing over it. Once a location is covered with water by the front tire of an automotive, next drops from its rear tire are not absorbed by the area and transferred to the adjacent one which is still dry. The more the automobiles, the longer the wetted lane is extended.

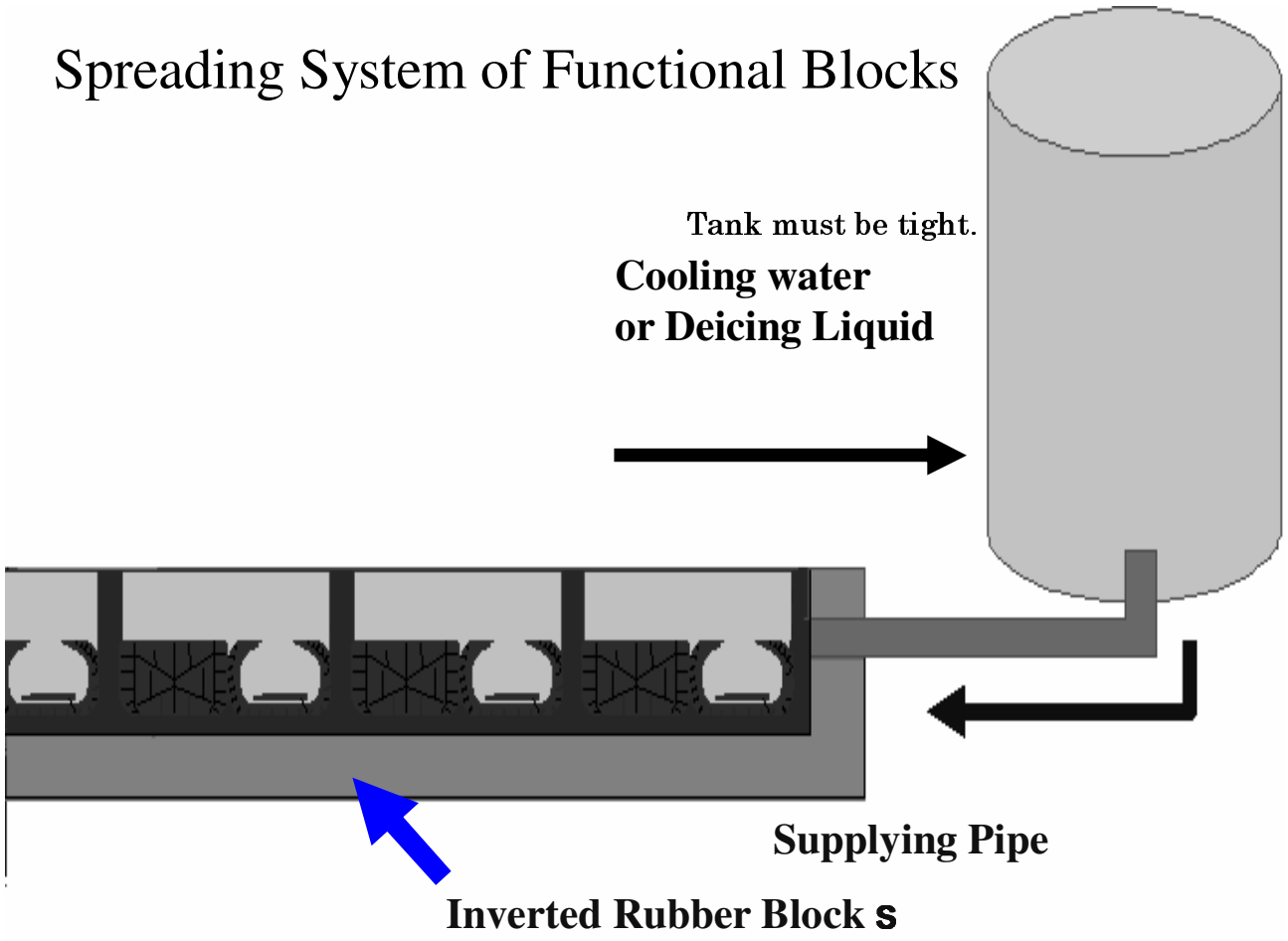

Figure 11. Spreading system with functional blocks

7. CONCLUSIONS

Concrete blocks with rubber may have a potential to give roads a variety of functions from preventing skid accidents to cooling. The studies showed that;

1) Wear resistance of tire rubber is proved satisfactory by data of other traffic means.
2) Rubber pieces showed a potential to reduce traffic noise and prevent skid accidents.
3) Rubber separation can be solved by a design to combine asphalt with fitting shapes.

8. REFERENCES

Ref. 1 Inuzuka, M., Sasaki, K., Sato, I. 2003. Concrete Block with Used Tires presented at Session 7 of 7th International Conference on Concrete Block Paving.

Ref. 2 Inuzuka, M., Nagata, S., 1996 . Functional Blocks for Deicing Pro. 5th Int.l Conf. on Concrete Block Paving. p. 709.