AIR PURIFYING BLOCKS BASED ON PHOTOCATALYSIS

YOSHIHIKO MURATA, Ube-Mitsubishi Cement Research Institute Co.
1-297 Kitabukuro-cho, Omiya, Saitama 330-0835, Japan Tel: +81-48-642-1751, Fax: +81-48-647-2015, E-mail: murata@mmc.co.jp
KIYOSHI KAMITANI, Ube-Mitsubishi Cement Research Institute Co.
KOJI TAKEUCHI, National Institute for Resources and Environment

ABSTRACT

Nitrogen oxides in exhaust gases from automobiles have been causing so serious air pollution in urban areas that the products with a NO_x removal capability have been required. The pavement blocks laid on the road have locational advantages as an air purifying material. We have developed an interlocking paving block with an oxidative NO_x removal capability by means of a photocatalytic activity of titanium dioxide, and confirmed the performances under a UV intensity of the outdoor level. The photocatalytic concrete blocks with a brand name NOXER worked in the humidity and NO_x concentration ranges of the roadside environment and was actually implemented in a couple of sites in Japan. We are also researching the way to apply photocatalytic technology for another construction materials such as sound-proof walls.

1. INTRODUCTION

The atmospheric NO_x pollution due to exhaust gases from automobiles has become more serious particularly in the heavy traffic areas. NO_x removal measures such as automobile emission control and traffic reductions have been implemented but are not successful in reducing the total amount of emission. With all possible emission reduction measures, areas of high NO_x concentration may still remain where the emitted NO_x should be preferably removed. In spite of the demand for the atmospheric NO_x removal, virtually no technology have met the requirements until now. The practical solutions of purifying the environment with photocatalytic titanium dioxide have been widely studied in recent years [1]. It can remove NO_x from the roadside environment with the help of solar energy as reported by Ibusuki and Takeuchi [2]. Roadside NO_x removal technologies other than photocatalyst include the soil-based air cleaning system, the adsorption method and the flue gas deNO_x method with a concentrator. They have problems with maintenance and the driving energy consumption. Plants can absorb NO_x but require much spaces, have less performance than photocatalyst and pause when leaves fall. The photocatalytic technology, however, has no driving energy, less maintenance actions and can work throughout a year. Though the photocatalyst can oxidize the atmospheric NO_x and extract as nitrate ions in the same manner as the atmospheric oxidization process of the vehicle emitted NO [3], the oxidization at the photocatalytic titanium dioxide

surfaces is a very rapid process with active oxygen species such as hydroxyl radicals ($OH^{\cdot}$) and super oxide anion (O_2^-) formed in the presence of oxygen and sunlight.

$$NO \Rightarrow NO_2 \Rightarrow NO_3^-$$

In the oxidation NO_x removal process, resulting nitrate ions are accumulated in the substrate material, rinsed by the rain and removed from the system. Possible fixing means of the photocatalyst include fluorocarbon polymer sheet materials [4] and paint materials [5]. This technology is characterized by a global environment conscious and fossil fuel free nature, and expected to be used as a road material or a road equipment which easily become popularized. The following advantages are suggested when the technology is realized as pavement blocks [6],

(1) The block can be used as flat outdoor surfaces, where sunlight and rains necessary for the activation and regeneration are available.

(2) The block is installed close to the NO_x emission sources and reacts with the pollutants under a higher concentration.

(3) The block is adopted as a pavement of the roadside without any additional space for the NO_x removal.

We will discuss in this paper with the photocatalytic, NO_x removing cement based pavement block.

2. EXPERIMENTAL METHODS

2.1 PREPARATIONS OF SPECIMENS

The paving blocks have a surface layer of the titanium dioxide contained in a special cement mortar which is monolithically formed with the substrate by the vibration press. Blocks can be produced in various shapes by selecting the form type. A typical example is shown in Photo 1.

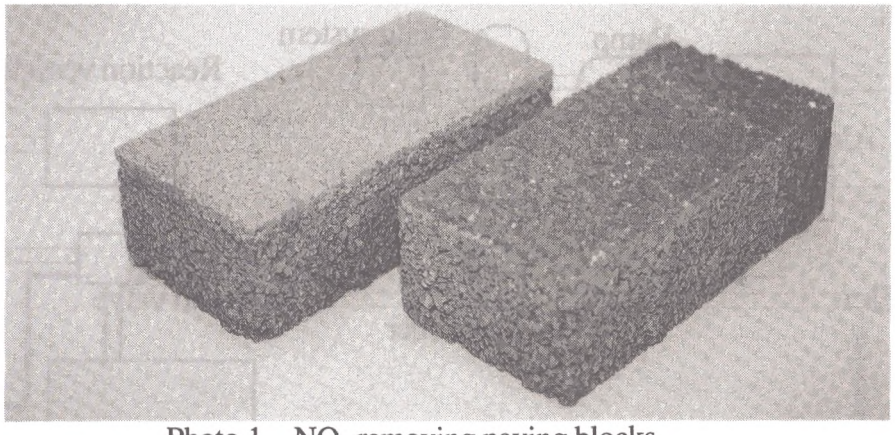

Photo 1 NO_x removing paving blocks

Specimens had 5 to 7 mm thick surface layer containing photocatalytic titanium dioxide on a monolithic substrate without titanium dioxide. Aggregates, cement, photocatalytic titanium

dioxide and water were mixed and placed in the form with vibration and pressed to have 60 mm in total thickness, 100 mm in width and 200 mm in length. The block formed a porous skeleton applicable as a permeable interlocking block. The specimens were subsequently cured at room temperature for 1 month and subjected to the test. The concept of the atmospheric NO_x removal by the block is schematically shown in Figure 1.

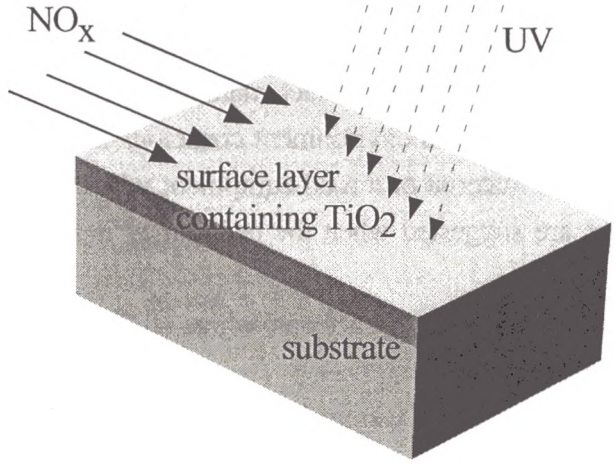

Figure 1 NO_x removal schematic of the paving block

2.2 EVALUATION OF THE NO_x REMOVING PERFORMANCES

The NO_x removing performance test was carried out with an apparatus as shown in Figure 2. A block specimen with a surface area of 200 cm^2 was set in a reaction vessel as shown in Figure 3, where an simulated emission gas made by mixing a dry air and a dilute NO gas with the flow-controllers to have a NO_x concentration of 1.0 ppm was passed through at a flow rate of 3 l/min. The reactor vessel was made of PVC and had a upper window of the UV transparent Pyrex glass. A gap between the glass and the block surface was 5 mm to allow the photocatalyst a sufficient contact with the air. Temperature of the test was the room temperature of 25 °C and

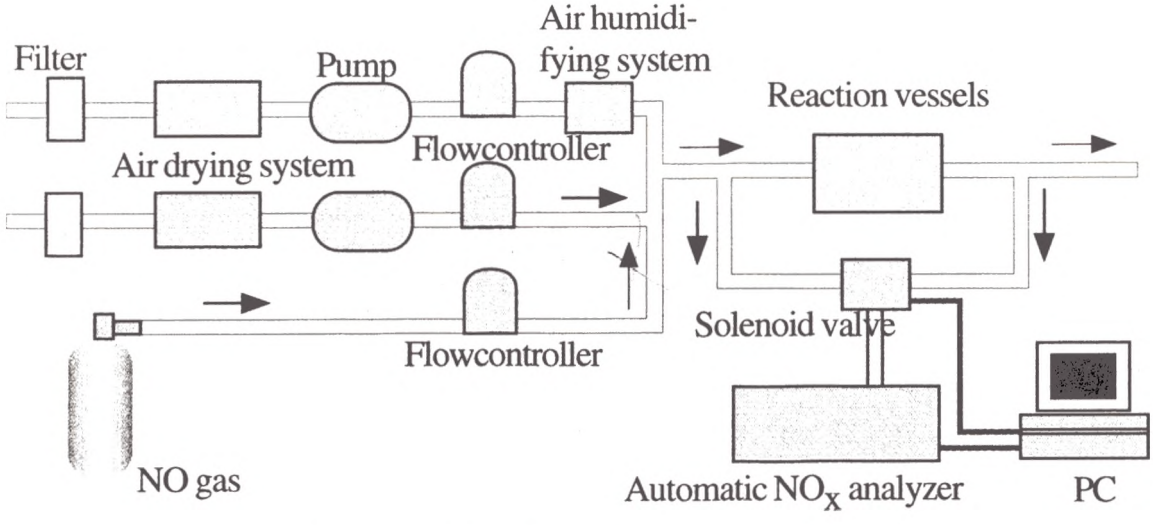

Figure 2 System of evaluating NO_x removing performances

the relative humidity of the simulated emission gas was 50 % except for a test series where humidity was a variable. UV with an intensity of 6 W/m^2 (UV-A: 315-400 nm) was applied on the specimen by a pair of 10 W black light. The NO_x concentration was determined by a chemiluminescence NO_x analyzer (Monitor Labs, INC. ML9841). From the differences in concentrations at the inlet and the outlet, the amount of NO_x removal was obtained and the NO_x removal ratio, a ratio of the concentrations of the outlet to that of the inlet, was calculated. Measurement was continued for 12 hours and the concentrations of NO_x , a sum of NO and NO_2, was recorded.

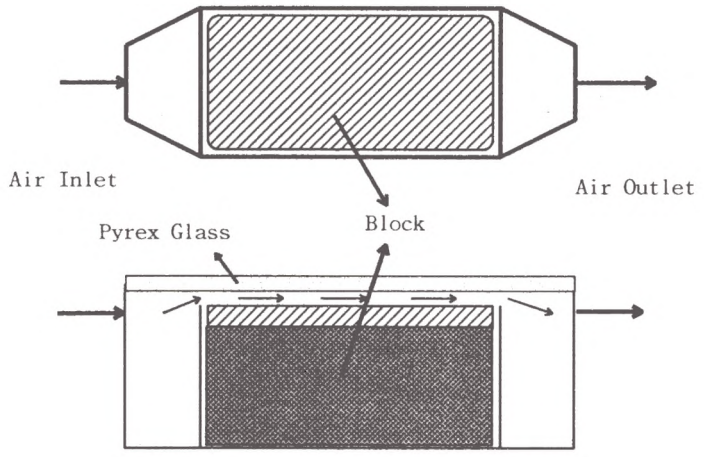

Figure 3 Reaction vessel for NO_x removing performance evaluation

The outdoor performance test was carried out with the same reaction vessels settled outdoors for three days under the same gas flow and natural UV environment. The roadside air was introduced in the reactor vessel at a flow rate of 3 l/min and the difference in radiation conditions with direct sunshine and with a sunshade screen was compared.

2.3 MECHANICAL PROPERTIES OF THE BLOCK

(1) Skid resistance test
The British Pendulum Skid Resistance Tester specified in the ASTM E303 was applied on the block surfaces under dry and wet conditions.
(2)Flexural strength test
Flexural strength was tested according to the JIS A 5306.

3. RESULTS AND DISCUSSIONS

3.1 PERFORMANCES IN THE LABORATORY TEST

Dependence of the NO_x removal upon relative humidity is shown in Figure 4. In the humidity

range from 10 to 80 %, NO_x was removed, thereby the blocks can work under the normal atmospheric humidity ranges. At higher humidity, the NO_x removal performance decreased probably because the water adsorbed on the photocatalytic surfaces interfered the adsorption of NO_x.

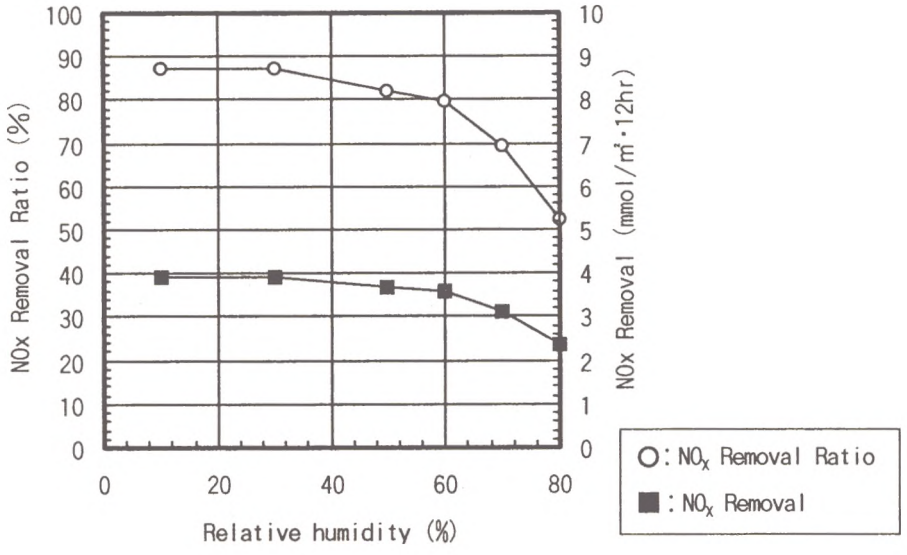

Figure 4 Dependence of NO_x removal upon relative humidity
(UV intensity: 6 W/m^2, NO feed concentration: 1.0 ppm)

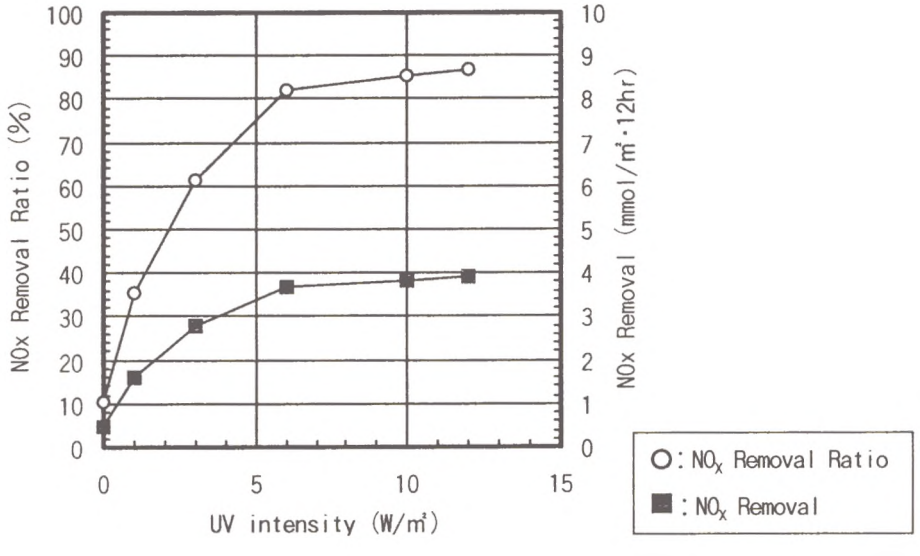

Figure 5 Relationship between UV intensity and NO_x removal
(NO feed concentration: 1.0 ppm)

Relationship between UV intensity and NO_x removal is shown in Figure 5. The UV wavelength ranged from 300 to 400 nm and the NO_x concentration of the inflow air was 1.0 ppm. The NO_x

removing performance was confirmed when the UV intensity was from 1 to 12 W/m^2. Effect of NO_x adsorption can be seen in a small amount of the removal when UV intensity became zero, therefore, adsorption effects can be neglected in the NO_x removal performance test. Since the UV intensity of a direct sunlight in summer is 20-30 W/m^2 and the minimum UV intensity in cloudy winter days is 1 W/m^2, the photocatalyst can work throughout a year.

Relationship between NO concentration in the inflow gas and the NO_x removal is shown in Figure 6. The NO concentration was varied from 0.05 ppm to 1.0 ppm whereas the NO_x removal was almost constant throughout the concentration range that corresponds to those observed as the current roadside level. Removal of low concentration NO_x in the real atmosphere is thus realistic.

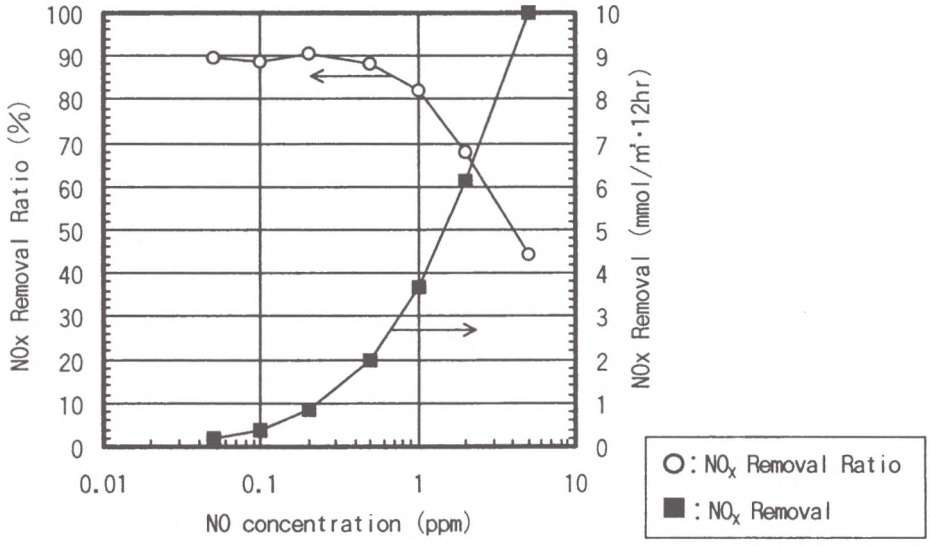

Figure 6 Relationship between NO concentration and the NO_x removal
(UV intensity: 6 W/m^2)

3.2 PERFORMANCES IN THE OUTDOOR TEST

(1) NO_x removal test under sunlight

Though the black lights were used as an UV source in the laboratory test, this experiment was carried out under time-dependant variable UV intensity with a 1 ppm of NO gas flow and the amount of NO_x removal was determined. NO_x removing blocks worked quite well either in a sunlight UV level as shown in Figure 7. The nocturnal performance without a sunlight was almost zero. Direct sunlight are not necessary because the working UV intensity range where the blocks show constant NO_x removal ratio is as low as 1 W/m^2 as given in the diffused reflection or artificial light sources. Since the currently available mercury lamps have sufficient UV intensity for the photocatalytic reactions, these artificial light sources can be applied to the NO_x removing blocks in tunnels or in nocturnal uses.

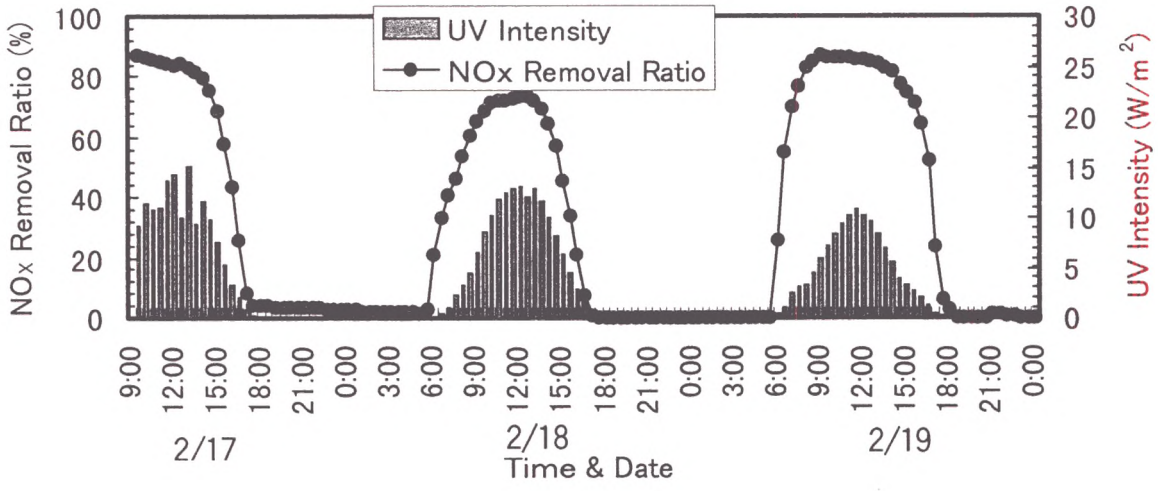

Figure 7 NO_x removal in the outdoor
(NO concentration: 1 ppm, gas flowrate: 3.0 l/min)
Feb. 1998 at OMIYA, SAITAMA, JAPAN
UV intensity UV-A (365 nm)

(2) Atmospheric NO_x removal at roadside

Roadside air containing NO_x was introduced in the reaction vessel which was subsequently exposed to the sunlight. Flow rate of the roadside air was 3 l/min and the NO_x concentration at the outlet was determined. The result of NO_x removal is shown in Figure 8. When the radiation condition was varied from covering to direct sunlight, resulting NO_x concentrations at the outlet were greatly decreased , thus, it was possible that the NO_x removing block can be

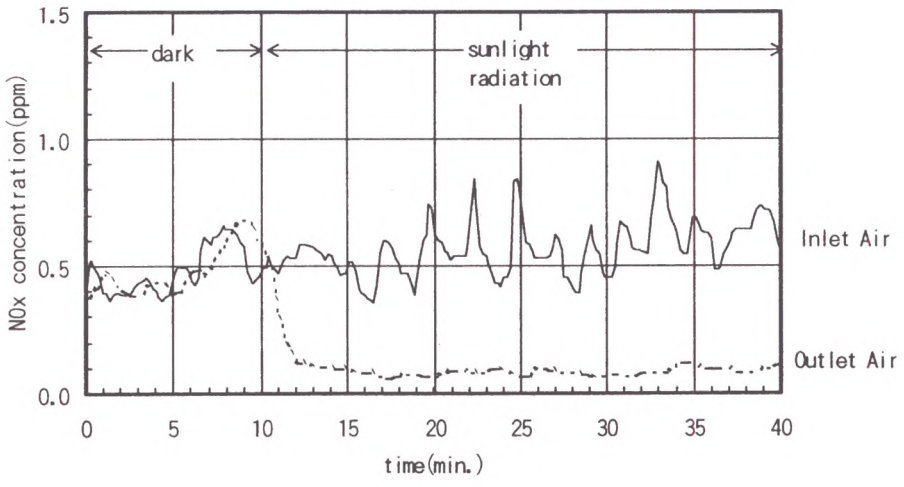

Figure 8 NO_x removal at a roadside environment (suburbs of Tokyo)
Temperature: 17 °C, Relative humidity: 47 %

used in the roadside environment and can show as much performance as those obtained in the laboratory tests. The NO_x removing blocks are now subjected to the outdoor exposure test to check the long term performance, by which further improvement can be expected. Some evidences of neutralizing the acidic drainage by alkaline particles in the roadside air has been obtained [7], and it may be expected that the decomposition of the substrate block is not significant because the amount of nitric acid originated from the oxidation of the atmospheric NOx is so small.

3.3 PROPERTIES AND THE CONSTRUCTION OF THE BLOCKS

The NO_x removing blocks can be laid in the same manner as used for the conventional interlocking blocks since the test results of the mechanical properties such as flexural strength and skid resistance were satisfactory as shown in Table 1.

Table 1 Mechanical properties of the NO_x removing block (permeable interlocking block)

		Measured value	Standard values	Test methods
Flexural strength		4.63 N/mm^2	more than 2.9 N/mm^2	JIS A 5306
Skid resistance test	wet	65-70 BPN	more than 65 BPN	ASTM E303
	dry	80-85 BPN		

4. EXAMPLES OF CONSTRUCTION OF THE NO_X REMOVING BLOCKS

The NO_x removing block NOXER has been applied to a couple of sites in Japan. In the redevelopment project of Narashino city, NOXER was widely applied to the pavement as shown in Photo 2, while it was used in the roadside of Kawasaki city contaminated by the emission gases as shown in Photo 3. These applications are characterized by the use of the



Photo 2 Construction at Narashino City

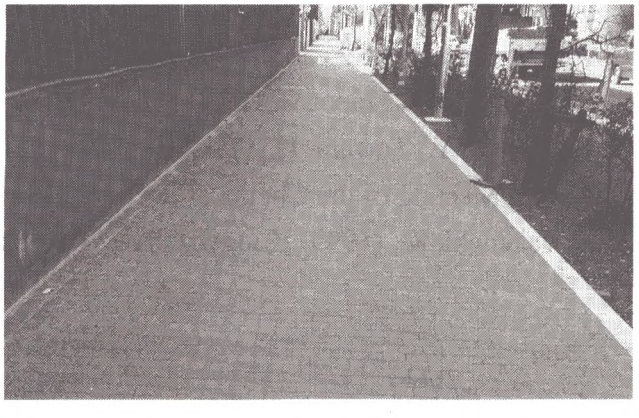

Photo 3 Construction at Kawasaki City

permeable substrate block taking into considerations of rain infiltration to minimize the sewer road.

5. CONCLUSIONS

The atmospheric NO_x pollution has become serious in the urban roadside. The NO_x removing paving blocks with a titanium dioxide surface layer have developed. The photocatalytic removal of the atmospheric NO_x was confirmed. The NO_x removing performance and physical properties of the paving block were measured and the followings are resulted.

(1) The NO_x removing block was able to remove the low concentration NO_x of a roadside level.

(2) The block worked under a normal humidity range between 10 to 80 %.

(3) The block worked under as low UV intensity of 1 W/m^2 as those in cloudy winter days in Japan. Thus the block can be expected to work throughout a year.

(4) The block performance under a sunlight UV level was confirmed by the outdoor tests.

(5) Since the block has equal mechanical properties and durability with that of the normal blocks, it can be placed and used in the conventional manner.

The photocatalytic block is a long-life product but now subjected to a long term test to confirm the roadside performance and the degradation over time which may be reflected in the subsequent development. In order to process continuous automobile emission under the limited sunlight, the roadside photocatalytic product should have both more efficient photocatalytic capability and a large surface area resulting in a new product, for example, photocatalytic sound absorbing boards.

REFERENCES

1. Hoffmann, M. R., Marin, S. T., Choi, W.and Bahnemann, D. W. (1995) Chem. Rev., Vol. 95, pp. 69-96

2. Ibusuki,T. and Takeuchi, K. (1994) J. Mol. Catal., Vol.88, pp. 93-102

3. Kaya, Y. (1991) Handbook of Global Environment Technology, Ohm-sha, p. 631

4. Takeuchi, K., Toyose, T., Kutsuna, S. and Ibusuki, T. (1994) Shigen to Kankyo, Vol. 3(2), pp. 103-110

5. Takeuchi, K., Sawano, S., Okita, K. and Ibusuki, T. (1996) Preprints on the 37th Annual Meeting of the Japan Society for Atmospheric Environment, p. 529

6. Murata, Y., Tawara, H., Obata, H., Takeuchi, K. and Ibusuki, T. (1997) Preprints on the 72nd Spring Meeting of the Chemical Society of Japan, p. 127

7. Takeuchi, K., (1999) Kougyozairyo, Vol.6, p. 88