STUDY ON EVALUATION OF AMENITY FOR IBL-PAVE SIDEWALK

TSUNEO MAKI, PROFESSOR, TOKYO UNIVERSITY OF AGRICULTURE
1-1-1 Sakuragaoka Setagaya-ku 156-8502 JAPAN
TEL +81-3-5477-2343 FAX +81-3-5477-2620
E-Mail makimaki@nodai.ac.jp
MASASHI KOYANAGAWA, ASSOCIATE PROFESSOR, T.U.A.
YASUSHI TAKEUCHI, T.U.A.ASSISTANT PROFESSOR, T.U.A

ABSTRACT

The material for a sidewalk is frequently selected by design or color caused by hardness of evaluation of the amenity, though it should be selected considering the amenity for a walker since a sidewalk is the amenity space of a town. However, it is important to make a comfortable sidewalk these days. The amenity evaluation of a sidewalk is different from person to parson, and it is difficult to make a sidewalk to make each and everyone comfortable. But some uncomfortable factors are "chipped-off pavement", "water stays", "hardness", "color is dirty", "slippery" and "not smooth". The following should be examined uncomfortable factors: durability, roughness, skid resistance, water permeability, color change, elasticity, visibility, and soon. Smoothness, skid resistance, and color change are taken up in this study among other items a method of evaluation is suggested.

1.ILB-PAVE SIDEWALK

A 3m-Profilemeter is used to evaluate the smoothness of a roadway and BPST is used for skid resistance. However, testers for a roadway frequently results cause incorrect evaluation in evaluating of a pavement. Visible roughness affects the evaluation of the roughness of a sidewalk other than the roughness directly felt by feet of a walker. If there is one defect although the whole road is smooth, the evaluation on the whole road will be incorrect. If a place a walker uses is smooth even though the edge part of a pavement has defect, the road is sometimes evaluated as having no defects. If individual defect is small even though a whole road has large waves, the evaluation on the road will be a smooth pavement. The width of a joint of ILB is made smaller from 13 mm to 9 mm, and the evaluation is considerably improved, but it still gives an image of a pavement with roughness. Next, the drainage ability of ILB pavement relates to water permeability of the pavement, and the drainage ability of the base course. When water stays on the surface, it not only makes a walker difficult to walk on the road but also the surface becomes slippery. Accordingly, the skid resistance evaluation is required. ILB has been evaluated as a colorful material with design performance but it is said that it could be easily discolored, whether the cause of discoloration is dirty or natural deterioration has not been sufficiently examined. The study on ILB for using on a sidewalk pavement is delayed as stated above.

2. ROUGHNESS OF SIDEWALK

2.1 Defects of Sidewalk

It is very hard to determine the matters to be evaluated, individual faulting of a block or the roughness of the whole road for matching the evaluation by a walker and the measurement for a roadway cannot be applied to a sidewalk as it is. To select a method for roughness evaluation, causes the generation of roughness on a sidewalk and were analyzed as follows:

(1) Incline and gradient
(2) Dropper of sidewalk.
(3) Texture of pavement
(4) Bad placement
(5) Movement of cushion sand
(6) Street tree

One or some of the above appear simultaneously. Since defects generates not only at a fixed place. It was considered that a method to evaluate the defects on the whole road along the walking traffic stream line if preferable.

2.2 Roughness Tester

A wheelchair was considered to be a machine to measure individual roughness with high reproducibility for roughness measurement along a walking traffic stream line.(Photo 1) A hand pushing wheelchair with solid tires for front wheels and pneumatic tires for rear wheels was used. An accelerometer (response frequency DC - 1 kHz, resonance frequency about 1.35 kHz) was mounted on the front axis to record the vibration generated during running into a data recorder, vibration waveforms were taken into a computer at 1 kHz of sampling frequency, a moving average was taken, and then the data were numerated as an amplitude integral value. When a wheelchair is used as a sensor, the body weight of a crew or the pushing speed influences the data. To know the properties of the test machine, a 90 cm wide and 9 m long test road were prepared indoors and 42 kinds of test roads was made combining 7 kinds of joint width, 2 kinds of joint interval, and 3 kinds of faulting for examination. The step of a pusher was set to about 70 cm and the pushing speed was adjusted by the pusher according to the rhythm of a metronome. The result was as follows:

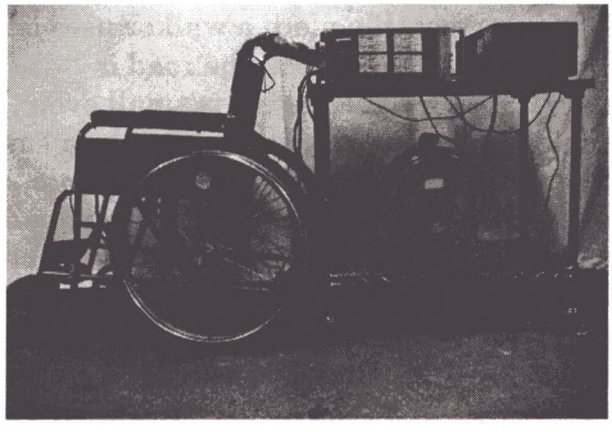

Photo 1 Roughness tester using wheelchair

(1) The body weight difference has almost no effect on the measurement result and no problem exists when tests are carried out and compared by same body weight.
(2) The influence of the pushing speed has no problem on the evaluation as far as the

Table 1 Outline of routes

Route No.		
A	R-He	1986
B	R-He	1990
C	R-St	1985
D	R-St	1986
E	R-St	1987
F	R-St	1991
G	R-St	1993
H	S-St	5mm chamfer
I	S-St	5mm chamfer
J	S-St	3mm chamfer
K	S-St	3mm chamfer
L	S-St	5mm chamfer
T-1	S-St	F=0mm J=9mm
T-2	S-St	F=0mm J=12mm
T-3	S-St	F=0mm J=15mm
T-4	S-St	F=5mm F%=10%
T-5	S-St	F=5mm F%=20%
T-6	S-St	F=5mm F%=90%
T-7	S-St	F=10mm F%=10%
T-8	S-St	F=10mm F%=20%
T-9	S-St	F=10mm F%=90%

1993: year of construction
R:rectangular block
S:shaped block
He:herringbone bond
St:stretcher bond
J=joint width
F=degree of faulting
F%=faulting (%)

speed is not changed.
(3) The effect of the faulting appears larger than that of the joint width on the measurement result.
It was learned that the evaluation of a sidewalk can be performed.[1)]

2.3 Evaluation of Roughness of ILB

An evaluation test was carried out on 12 sidewalks and 9 test roads made for the experiment. The body weight of the crew on the wheel chair was 68 kg and the pushing speed was 76 steps/minute and the wheelchair returned 10 m of the test distance for evaluation. The 3 mm chamfer ILB (welfare block by improved chamfering) and the 5 mm chamfer ILB are employed on the sidewalk and shapes of blocks are rectangular block and shaped block. The uneven parts on a test route were determined by a random function. The outline of routes are showed on a Table-1. The result of the measurement of the integral value of the sidewalk is 160 - 340 (Volt) showing an almost same value with that of the T-9 route with 10 mm of faulting at the route D and the route I to be evaluated as a sidewalk with considerable faults. The route L has an

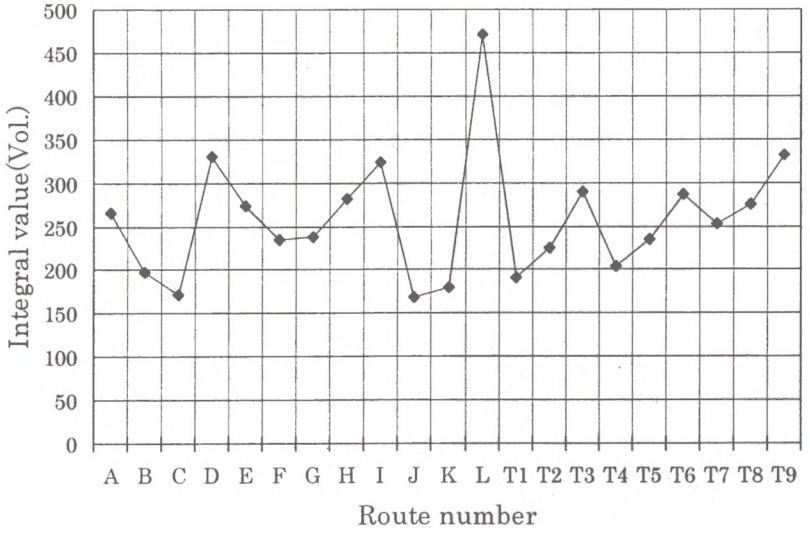

Figure 1 Result of integral value

extremely high 470 (Volt) of integral value and the a surface needs to be repaired. Comparing the routes H, I, J, and K, values are smaller for the 3mm chamfer than that of the 5 mm chamfer showing that the defects on a pavement surface is reduced by making the joint width smaller. Large defects shows a large integral value agreeing with the trend of the result of the preliminary examination. As the result of the above, it was learned that this tester can evaluate the roughness of ILB. The 3mm chamfer has defects smaller than that of the 5mm chamfer . Data accumulated from now on will be useful for the evaluation of a pavement and the estimation of a repair time.(Figure 1)

3. SKID RESISTANCE OF PAVEMENT

3.1 Skid Resistance of Sidewalk

Various data such as foot movement, vertical pressure acting on a floor, load acting time, slide speed causing skid, etc. are required for the evaluation of skid resistance of a sidewalk pavement, but basically the skid phenomenon in walking can be evaluated by the static friction coefficient. The skid of a sidewalk has been evaluated by BPST, but it has a problem that it cannot evaluate the skid when the pavement has a joint or a faulting. So we prepared DFT S-type[2] based on DFT (ASTM-E1911-98) used for roadway referring to the studies by R.Skiba [3] and R.Brungraber [4] so that the following conditions can be satisfied:

(1) Measurement of static friction coefficient and dynamic friction coefficient can be carried out.
(2) Measurement in a set condition can be carried out.
(3) Measurement of a pavement with joint or inclination can be carried out.
(4) Exchange of a shoe sole material can be carried out.
(5) The tester has light weight and outdoor measurement can be carried out.

3.2 Dynamic Friction Tester S-type

DFT S-type comprises a drive disk directly connected to a drive motor and a light skid disk connected by a spring balance to measure the friction coefficient converting a deviation of disks generated when shoe sole rubber is rotated in contact with a pavement to a quantity of electricity by the spring balance and a displacement meter. Two sliders with adhered show sole rubber are attached to a position at 7 cm of rotation radius on the skid disk and the grounding area of the rubber is 0.8 cm^2 and the grounding pressure 1.25 kgf/cm^2. Two methods are used for the tester, one is to measure the static friction coefficient at the instance of starting to move and the other is to measure the dynamic friction coefficient by rotating the shoe sole rubber and grounding it on the pavement when

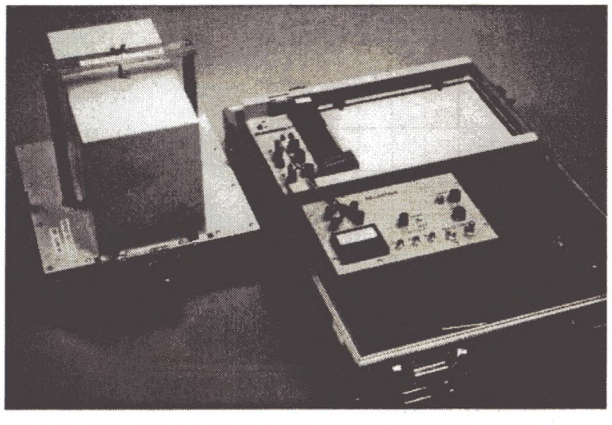

Photo 2 DFT S-type

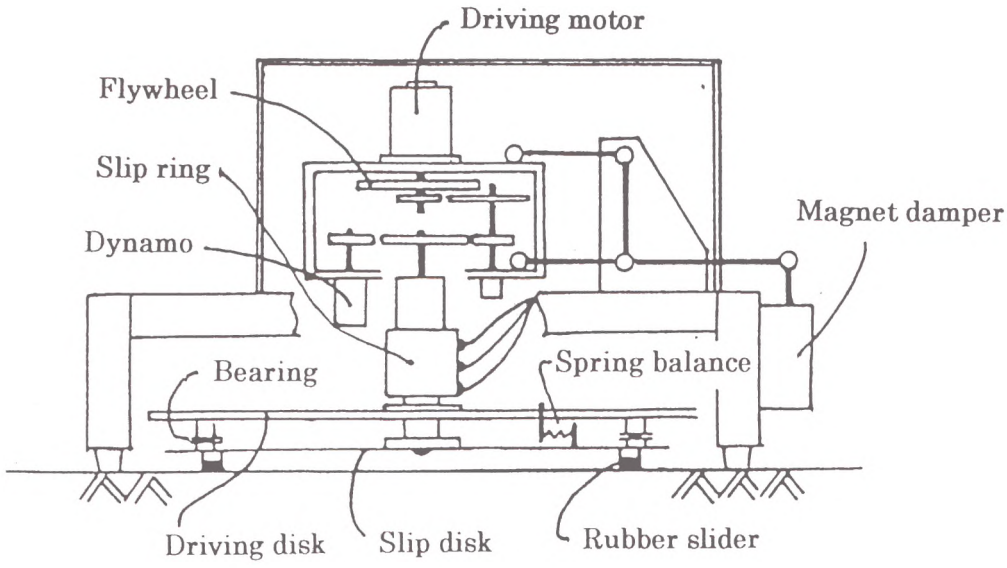

Figure 2 Mechanics of DFT S-type

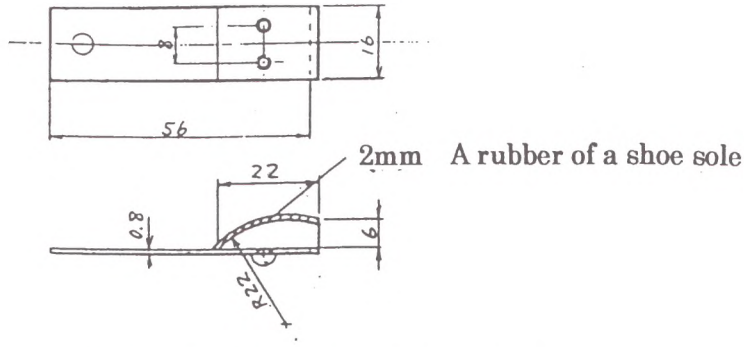

Figure 3 Shoe sole rubber slider

the rubber reached a prescribed speed. The tester comprises a main body (15 kg) and a recorder (11 kg) and attached with a water sprayer(Photo 2,Figure 2). The shoe sole rubber is a 2 mm thick rubber plate based on ASTM E-501. Since the slider is in a curved face structure, the grounding area is made constant by only adhering to the rubber.(Figure 3)

Properties of the tester were evaluated as follows

(1) Since the static friction coefficient was measured at the instance of the starting of the shoe sole rubber, there was a possibility that a correct value was not showed on a recording paper. As a result of measurement by a computer, 59.8 msec of a static friction coefficient was obtained after starting the measurement and the value agreed with the value on the recording paper.

(2) Considering a dynamic friction coefficient for running on a sidewalk, the dynamic friction coefficient at 10 km/h (about 2.8 m/sec) was measured grounding the shoe sole rubber on the pavement at 12 km/h of disk rotation speed. It was learned that a dynamic friction coefficient can be measured until immediately before the rotation stops.(Figure 4)

(3) Influence of the rubber appears when the measurement was repeated at the same position., but it was eliminated by moving the measurement position only a

little to obtain highly reproducible data with the variation lower than 5%.
(4) To know the relation between the quantity of roughness and a direction coefficient, seven kinds of terrazzo plates ground by No. 80～6000 grindstones were prepared. Roughness of those were measured by a surface roughness tester. About 10 mμ of roughness exits on the plates ground by No. 400～6000, and roughness of the plates ground by No. 200 under became larger, about 25 - 30 mμ. The static friction coefficients for No. 400～6000 were about μ=0.3 and μ=0.4 or higher for No. 200 under and a same trend was observed for the dynamic friction coefficient. Consequently same trend was observed in the measurement results of the quantity of actual roughness and friction coefficient.(Figure 5)
(5) There were various opinions on the value of friction coefficient required for a safe sidewalk. The border of safety and not safety was set at μ=0.4 by Doering[5] and the safe friction coefficient was set at μ=0.5 by James,M.Miller[6] and Ekkebus,C.F.[7]. There were opinions on μ=0.6～0.7 for a safe friction coefficient set by Barrett,G.F.C.[8] and Schuster,K.[9], but they were undefined. Generally

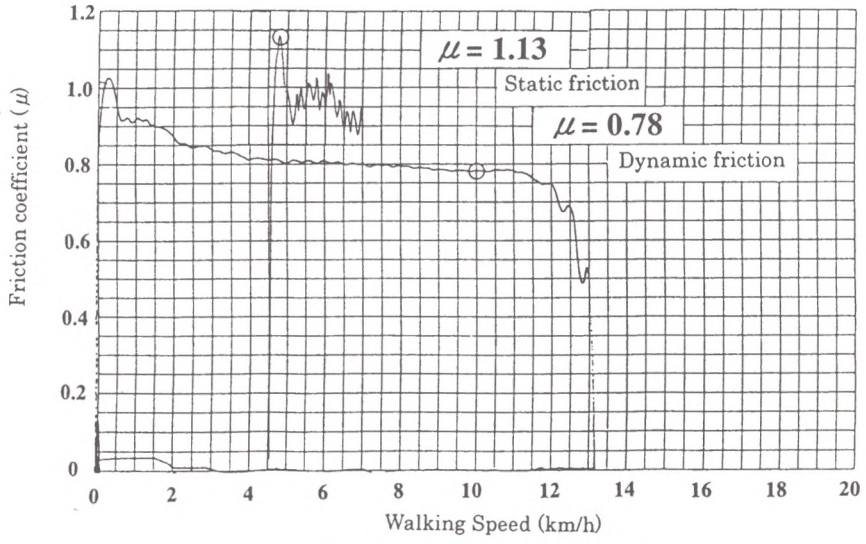

Figure 4 Results of friction coefficients

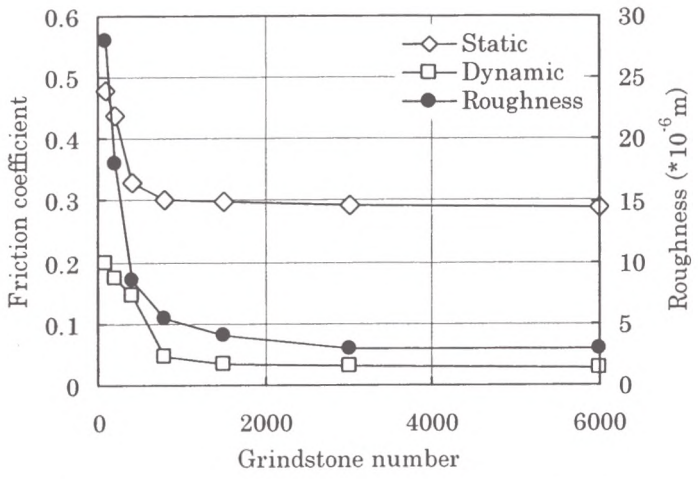

Figure 5 Roughness and friction coefficients of terrazzo palate

judging from a number of pavement evaluated by this tester, a static friction coefficient higher than μ=0.5 was considered safe as a sidewalk.

3.3 Evaluation of Friction Coefficient by ILB

The shoe sole rubber sometimes hits a joint part according to the position of the shoe sole rubber in measurement of a static friction coefficient since ILB had joints and the shoe sole rubber necessarily passed on a joint in measurement of the dynamic friction coefficient. Since a measurement value had a possibility to change caused by a joint on ILB, a comparison was made on the 3 mm chamfer and 5 mm chamfer with different joint widths. As a result, almost no influence was observed on the static and dynamic friction coefficients by the difference of joint widths. However, it was learned that the friction coefficient changes by service conditions by comparing results for ILB during periods in different services, μ=0.8～1.0 of static friction coefficients and μ=0.7～0.8 of dynamic coefficients were presented for 5 mm chamfer and μ=1.0～1.2 of static friction coefficients and μ=0.9～1.0 of dynamic coefficients were presented for 3 mm chamfer . Since both the static and dynamic friction coefficients exceed μ=0.5 in wet conditions, ILB pavement was considered safe in rain.

4. EVALUATION OF COLOR OF PAVEMENT

4.1 Color of Pavement

It is sometimes said that of ILB used as pavement easily changes in color after construction. The causes are as follows:

(1) Natural deterioration of the material itself
(2) Weather conditions such as ultraviolet radiation
(3) Discoloration by soiling, and others

However, it is a serious problem that the color of pavement appearing as a color image of a designer or a sample changed after the application, and it is necessary to preliminary grasp the condition of a color change if there is a possibility that the color changes. It is also necessary to preliminary examine the visibility of the color of a pavement under a street light considering safety in the night through a pavement is designed by color in daylight.

4.2 Color Measurement

The measurement of color is carried out by a colorimeter. The value measured by an instrument and the expression of color actually felt are frequently different and the color is affected by the sunlight or street light irradiating on pavement. Consequently a luminance coefficient was used to evaluate color eliminating differences of light sources and lightness.

Luminance coefficient ($cd/cm^2/lx$) = Luminance / Illuminance ----------(1)

Luminance : luminance (cd/cm^2) measured by a luminance meter at 1.5 m height on a position 3.0 m from the pavement

Illuminance : horizontal illuminance (lx) of a pavement surface in luminance measurement

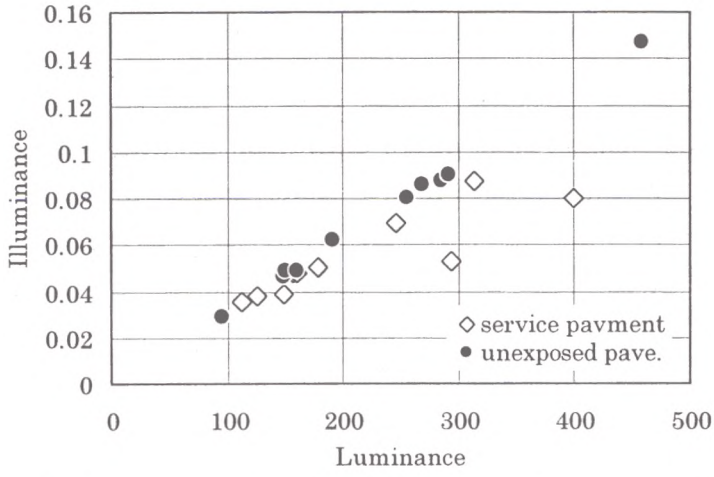

Figure 6 Pavement luminance in halogen light

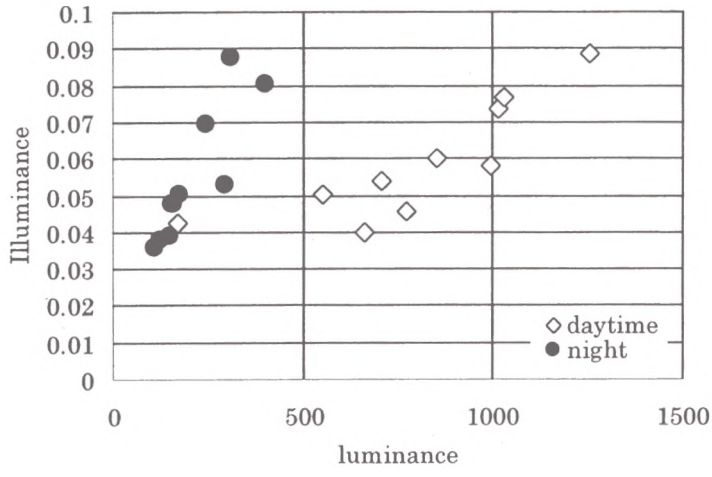

Figure 7 Luminance on daytime and night in halogen light

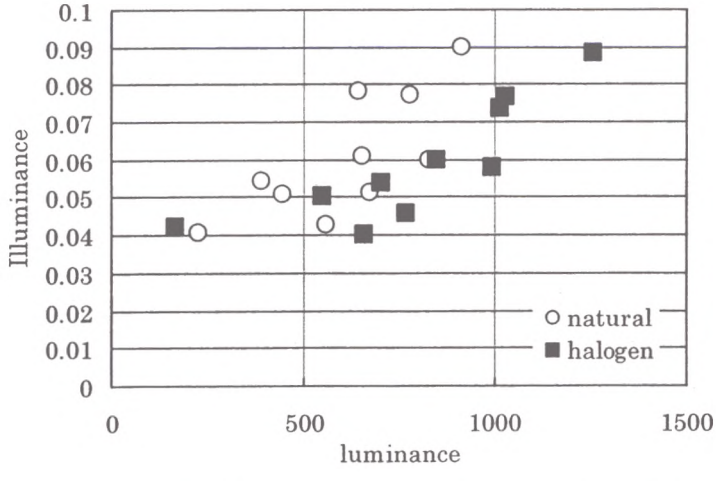

Figure 8 Luminance of service pavement

Light in daytime, street light in night, and halogen light (the illuminance of a surface was adjusted to about 3,000 lx irradiating the light of a 500 W halogen lamp to the pavement from a 1 m far and 1 m high point) were used other than the C light source (CIE standard source) and a colorimeter, a luminance meter, and an illuminance meter were used for measurement. An unused pavement retained under natural conditions and unexposed pavement stored indoor so as not to be changed by ultraviolet radiation, and a group of pavement actually used for a sidewalk were used for the color measurement.

4.3 Evaluation of ILB Pavement Color

The luminance of the exposed pavement retained under natural condition lowers more than that of the unexposed pavement stored indoor to show the color changes only by retaining under a natural condition. Next, it can be generally said that pavement with bright color has high luminance density because the unexposed pavement with high lightness has high luminance density and the same trend is observed in the exposed pavement. The luminance density under natural light presented a value lower than that of halogen light to make pavement look brighter under white ILB, but, on the contrary, the luminance density was lower under halogen light under black ILB showing the pavement was harder visible by street light than the sunlight under black ILB. It was learned that a linear relation was recognized between the luminance density and the luminance for the unexposed pavement stored indoor, but the luminance density of the exposed pavement was smaller than that of the service pavement for a sidewalk, and the surface became whiter by service than that of the pavement retained under natural conditions. The exposed pavement had the luminous reflectance (index of lightness) higher than that of the unexposed pavement of the service pavement, i.e. the difference of the luminous reflectance by exposing was larger for white or yellow pavement compared to unexposed pavement. On the contrary, the difference became smaller for brown and black pavement indicating the influence of soiling on the luminance density for deep color pavement. Thus it was learned that the visibility of black pavement was low but white or yellow pavement had high visibility even at night. The luminance density of the unexposed pavement was widely distributed, but the range of the luminance density was narrowed by exposing and using. Considering the above, the color of pavement imaged by unused pavement has possibility of changing after use, so the pavement must be used after confirming to what extent the color will change. Since the luminance density differs according to lighting by street light outdoor at night, the examination on lightness of street lights is necessary. (Figure 6,7,8)

5.CONCLUSION

Diversified functions are required for sidewalk pavement in future, for instance not only design and color but also an environment free of barriers and giving the course to a sidewalk. Consequently, the evaluation for roughness, skid resistance, etc. are natural and further properties such as elasticity, riding resistance, etc.

must be grasped. It is expected that ILB will give information to many persons to make pavement comfortable and have diversified functions.

REFERENCES

1)T.Maki,Y.Takeuchi,M.Matsuda,(1996.12) A Study for Unevenness Evaluation of Sidewalk Pavement, Journal of Pavement Engineering, JSCE Vol.1,pp151-158

2) T.Maki,Y.Takeuchi,M.Koyanagawa,H.Abe,(1997.12) A Study for the Coefficient of Friction Tester for Sidewalk Pavement Materials, Journal of Pavement Engineering, JSCE Vol.2,pp197-204

3)R.Skiba,Wuppertal(1984) Gerate zur Bestimmung der Reibung zwischen Schu und Fusboden unter Berucksichtigung des menschlichen ganges, Kautschuk+Guummi Kunsistoffe 37 ,Jahrgang,Nr.6.

4)R.Brungraber(1976)An Overview of Floor Slip/Resistance Research With Annotated Bibliography, National Bureau of Standards Technical Note 895

5)Doering,R.D.(1974)Defining a Safe Walking Surface, National Safety News,8

6)James M.Miller(1983)A Bibliography of Coefficient of Friction Literature Relating to Slip Type Accidents, Center For Ergonomics and Safety Department of Industrial and Operations Engineering

7) Ekkebus,C.F.and Killey W.(1973) Measurement of Safe Walkway Surfaces, Soap/Cosmetics/Chemical Specialties for Feb.

8)Barrett,G.F.C.(1956) Observation on the Coefficient of Friction of Shoe Soiling Materials, Rubber Journal Dec.1

9)Schuster,K.(1966) Slip-An Investigation of Practical Accident Prevention, Die Berufsgenossenschaft / Betriebssicherheit, September