STUDY ON DEFLECTION AND JOINT WIDTH OF INTERLOCKING BLOCK PAVEMENT AFFECTING CHIPPING OF BLOCK

AKIHIKO KARASAWA, CONCRETE PRODUCTS GROUP, CENTRAL RESEARCH LABORATORY SAKURA, TAIHEIYO CEMENT CORPORATION, 2-4-2 Daisaku, Sakura, Chiba285-8655 *Japan*
TEL>8143498-3853 FAX+8143498-3821 E-MAILakihiko_karasawa@taiheiyo-cementco.jp
THE LATE TAKUYA IKEDA, HEAD PAVEMENT DIVISION, PUBLIC WORKS RESEARCH INSTITUTE, MINISTRY OF CONSTRUCTION
YASUYUKIS ANO, INTERLOCKING BLOCK PAVEMENT ENGINEERING ASSOCIATION
1-13-5 Iwamoto-eho, Chyoda-ku, Tokyo 101 -0032 Japan TEL +81 -3-3851-3234 FAX +81 -3-3851 -3235

ABSTRACT

The authors implemented indoor static repeated loading tests assuming the conditions close to the actual vehicle travelling for the purpose of determining the requirements for the control of workmanship for deflection and joint width in interlocking block pavement used for roadways in Japan As the result, it was confirmed that roadway pavement could be constructed without chipping of block during a long term service by designing the materials and pavement structure so that deflection andjoint width of workmanship fall below a certain value.

1. INTRODUCTION

It has been almost 25 years since interlocking block pavement was first introduced in Japan and the actual paved areas amounted 7,200,000 m in 1998. It has been applied mainly to places where a landscape aspect is emphasized for pedestrians and light traffic such as open spaces, parks, walkways and streets. But in recent years, applications to roadway pavement of B traffic category have been increasing as its excellent properties besides the landscape aspect like high durability, flexibility to differential settlement and easiness for maintenance have been recognized. The applications to such heavy loading pavement as roadways of C and D traffic categories, airports, ports and industrial yards are expected in the fixture.

There is a problem of chipping of blocks in some of the interlocking block pavement so far used for roadways and it is reported that the chipping of blocks are greatly attributable to the effects of deflection on the pavement surface andjoint width between blocks.

The authors tried to demonstrate the effects of deflection andjoint width between blocks affecting chipping of block and based on it, implemented indoor static repeated loading tests assuming the conditions close to the actual vehicle travelling for the purpose of determining the requirements for the control of workmanship for deflection and joint width in interlocking block pavement used for roadways in Japan.

This paper reports on the indoor test results and their analysis and on a study on block shapes for maintaining a certain joint width throughout the design period as well.

2. OBSERVATIONS ON THE CONVENTIONAL STUDIES

Today, the structural design for interlocking block pavement of L, A, and B traffic categories is basically subjected to the design CBR-T method but the design method for heavy loads of more than C traffic category has not been established yet[l]. Furthermore, there are quite a few cases where empirical design methods are used without applying the design CBR-T method for L, A and B traffic categories. Consequently, blocks are sometimes damaged depending on the traffic category and design method The damages of blocks are mainly classified into chipping, penetrating cracks and stripping of surface layer. The damages are mostly chipping, very slight chipping regardless of shapes, dimensions and laying patterns of block and the results of site investigations so far carried out clearly show that the occurrence rate of large chipping and penetrating cracks which hinder functions is extremely low even in the roadway pavement of B traffic category.

It will cause an aesthetic problem, though, if the numbers of chipping without hindering functions and regardless of its size exceed a certain proportion because interlocking block pavement stresses its landscape aspect

Hata and other researchers report the following points on damages of block in roadway pavement by analyzing the results of the follow-up site investigations carried on for 10-odd years[2];

(D Block damage takes place right after the service starts and the damage occurrence is substantially reduced in one year and after due to stabilization of joint sand and bedding sand and consolidation of the base course by traffic load

(2) Aesthetic claims are apt to be brought up when the damage rate of block exceeds 3%.

E) The damage of block is attributable to complex factors such as excessive deflection, shortage of joint width, movement of block in sharp slopes, strength of block and shortage of joint sand Deflection and joint width among the factors greatly influence the damage of block..

Hata and others sum up the points to apply interlocking block pavement to roadway pavement up to B traffic category as follows;

(1) It should be made sure that the pavement structure must be designed in accordance with the design CBR-T method in order to construct pavement with practically no damage rate(damage rate 1% or less)

(2) The standard joint width of 3mm between blocks should be secured by providing nibs on the side of block for securing the joint width.

(3) It is important to enhance rigidity of the base course to restrain deflection and bituminous or cement stabilization should be used for the upper base course in A and B traffic categories.

© The shapes of block should be rectangular module including dentated blocks to enhance load distribution and to restrain rutting in A and B traffic categories.

3. STUDY ON DEFLECTION AND JOINT WIDTH AFFECTING CHIPPING OF BLOCK

The research of Hata and others mentioned above discusses the causes of and measures for damage of block by analyzing the results of follow-up site investigations but this time the authors, for the next step, implemented indoor repeated static loading tests assuming the conditions close to the actual

vehicle travelling in order to study more precisely how deflection and joint width have an influence on chipping of blocks.

3.1 Outline of the Tests

(1) Testing Apparatus

The tests were carried out using corrosion-fatigue testing apparatus. The apparatus are for the fatigue test where stress or displacement fixed for various materials is repeatedly executed.

(2) Factors and Levels of the Tests

The factors and levels of the tests are shown in Table 1. It has been known that deflection at the real site of interlocking block pavement used for L, A and B traffic categories and designed with the CBR-T method is approximately less than 3mm through the measurement ofFWD and Benkelman-beam as well. Therefore, the deflection in these tests was fixed up to a bit higher 5mm.

Since it has been confirmed through the research by Hata and others that joint width of more than 3mm would cause almost no chipping, the widths of Omm, 1mm, and 3mm were fixed for these tests. The widths of 1mm and 3mm are adjusted by changing the thickness of nibs provided on the side of block for securing joint width(hereinafier called spacer nibs) and no spacer nibs were provided for Omm.

The numbers of loading applications were set at 150,000 because the cumulative 5-ton equivalent wheel numbers for the design period of 10 years in A traffic category are 150,000. When chipping of block took place, the counting of the numbers of loading applications was stopped there.

(3) Structure of the Testing System

The structure of the testing system is shown in Figure 1. The test was carried out in such a manner that rubber plate, sand bed and full-sized blocks were installed in a steel mold of 595mm x 595mm and static load is repeatedly given with a steel plate of <f> 100mm onto the center of the installation surface. The reason why the installation area was set as 595mm x 595mm is because Ishige and others had confirmed through static repeated loading tests that stress transfer is big within a range of300m from the loading center [3], The rubber plate was set because the blocks incur consistent deflection for a long time. The sand bed was set because the preliminary tests confirmed that if tire blocks are laid directly on the rubber plate, the performance of the rubber plate by loading and the performance of the blocks do not coincide causing floating of block depending on the numbers of loading applications.

(4) Test Conditions

The test conditions are shown in Table 2. Full-sized Uni-system blocks of 80mm thick(N-N type, N-S type) as shown in Figure 2 were used. The laying pattern was herringbone bond. Crushed sand with the quality as shown in Table 3 was used for bedding sand. Silica sand with the quality as shown in Table 3 was used for joint sand but #6 silica sand was used for the joint widths of Omm and 1mm and #5 silica sand for 3mm taking joint-filling properties into consideration. The rubber plate used was Type A with hardness 40 on durometer. The frequency for the actuator was fixed at 2Hz for the loading speed assuming the travelling of large-sized vehicles at 50km/h.

Table 1 Factors and Levels of the Tests

Factors	Levels					
	I	II	III	IV	V	VI
Deflection on the surface ofblock(mm)	0.5	1.0	2.0	3.0	4.0	5.0
Joint width (mm)	0.0	1.0	3.0	—	—	—
Numbers of loading applications	150,000 times or until chipping of block takes place					

Table 2 Test Conditions

Items		Conditions
Test apparatus	Kinds	Corrosion-fatigue test apparatus
	Loading speed	Frequency: 2Hz—set assuming 50km/h large-vehicle speed
	Loading plate	Steel, Φ 100mm
	Loading method	loading with the sine rule
Block	Shapes	Uni N-N type, S type 80mm-thick(chamfering dimension width 6mm x height 4mm)
	Spacer nibs	N-N type: 3 for longish side, 2 for shortish side N-S type: 2 for longish side, 2 for shortish side
	Laying pattern	Herringbone bond
	Strength	Bending strength 5.82(N/mm^2)
Ssnd bed		Crushed sand(hard sandstone) produced in Chchibu, Saitama, installed under the optimum water content ratios 10%)
Joint sand		Yamagata #5 silica sand for 3mm width, #6 for 0 and 1 mm
Point of loading		Loading on the center of the pavement surface
Replacement ofblock		Replaced for every testing Joint width for special-shapes 1mm and commonly used for every test

Table 3 Sand Bed and Results of Quality lest for Joint Sand

Sand	Maximum sizes (mm)	Specific gravity	Water absorption Weight in unit volume (%)	Solid volume percentage (%)	Loss in washing (%)
		Surface -dry			
Sandbed (silica sand)	2.5	2.63	1.44	66.8	4.3
Joint sand (#5 silica sand)	1.2	2.62	0.523	62.6	0.32
Joint sand (#6 silica sand)	0.6	2.63	0.181	59.4	0.04

Sand	Weight of passing sieves(%) nominal size(mm)						Fineness modulus (FM)
	5	2.5	1.2	0.6	0.3	0.15	
Sand bed (silica sand)	100	92	58	32	17	8	2.93
Joint sand (#5 silica sand)	100	100	100	87	7	0	2.06
Joint sand (#6 silica sand)	100	100	100	100	78	5	1.17

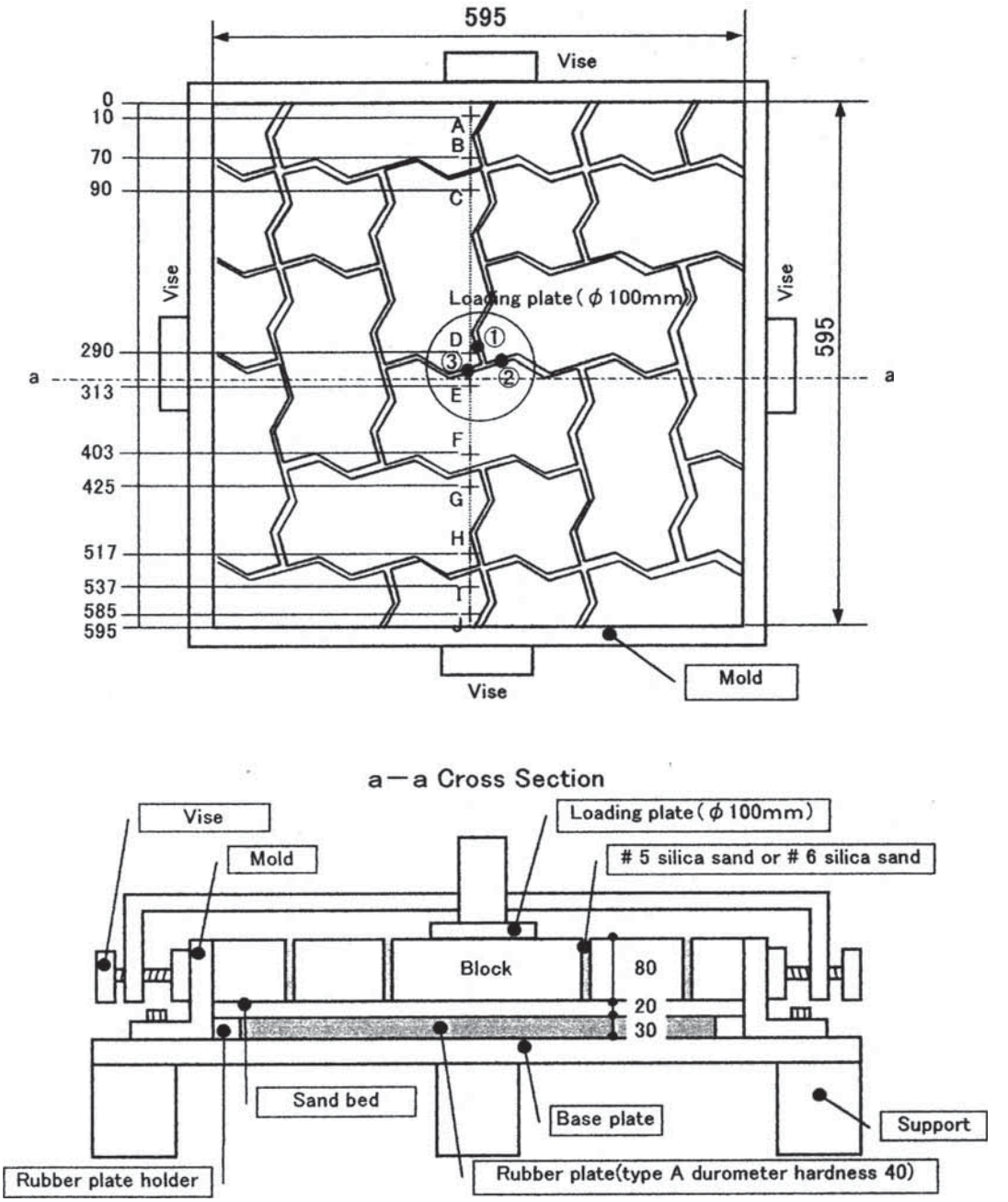

Figure 1　Structure of the Testing System

(5)　Items and Methods of Measurement

The 7 items shown in Table 4 were measured. The test conditions were set up under assumption of the actual vehicle travelling on the actual roadway pavement and the items No.3~No.7 were measured in order to verify the compatibility with the actual conditions.

3.2 Test Results

(1) Relationship among Deflection on the face of Block, Joint Width and Chipping of Block

An example of chipping of block is shown in Photo 1. The relationship among deflection

on the surface of block, joint width and chipping of block is shown in Table 5. From the table, it has been confirmed that no chipping of block occurs after 150,000 loading under the test conditions done this time if the deflection on the surface of block is less than 3mm and at the same time if the joint width is less than 1mm. In case of joint width of 0mm, chipping occurred with less loading numbers despite quite a little deflection and in case of joint width of 3mm, no chipping occurred up to 150,000 times loading despite big high deflection meaning compatibility with the research of Hata and others has been recognized

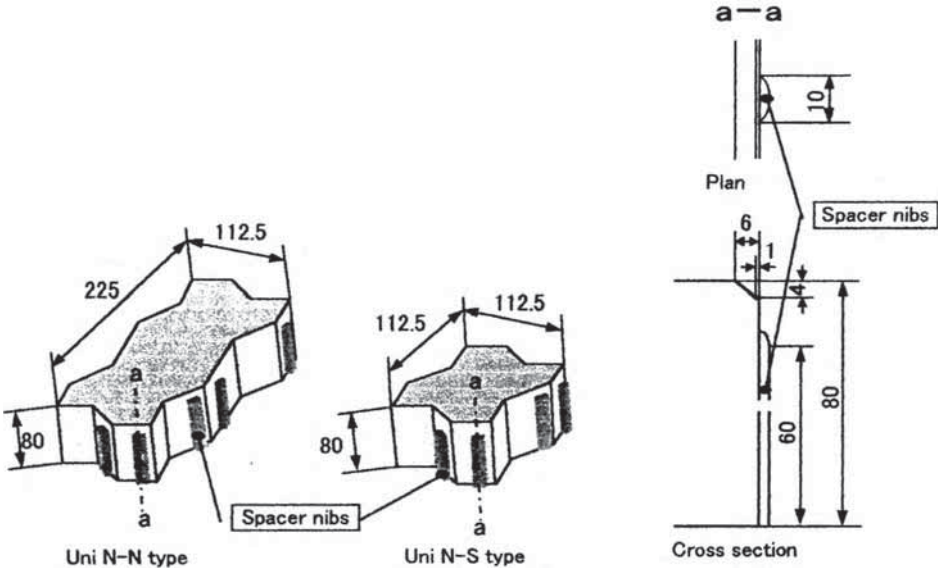

Figure 2 Block

Table 4 Items and Methods of Measurement

No	Sems of Measurement	Methods of Measurement	Locations of Measurement	Frequency of Measurement
1	Damage conditions ofblock	By taking photos	All blocks	Total 15 times for every 10,000 loading
2	Locations of Damage	Check on drawings	All blocks	
3	Load	Check on display for test conditions	—	
4	Elastic deformation ofblock surface	By dial gage	3 locations of CFH in Figure 2	Since it is assumed that the difference of joint width does not affect elastic deformation, it was measured before the tests for the typical joint width of 3mm
5	Plastic deformation ofblock surface	By depth gage	10 locations of ABCDEFGHIJ in Figure 2	Total 15 times for every 10,000 loading
6	Change in joint width	By thickness gage	3 locations of ① ②③ in Figure 2	Total 16 times for the initial time and for every 10,000 loading
7	Depth of loss of Joint sand	By depth gage	3 locations of ① ②③ in Figure 2	Total 15 times for every 10,000 loading

(2) Verification on Compatibility with the Actual Vehicle Travelling

The load used for the testing system is shown in Figure 3. The higher the deflection on the block surface is the more loading is given to the testing system and its distribution range was 0.59~6.94 mm^2 Since it is assumed that the distribution range of contact pressure of actual vehicles is 0.2 ~2.0 N/mm^2, the load used for the testing system is considered to be much higher than the actual case[4].

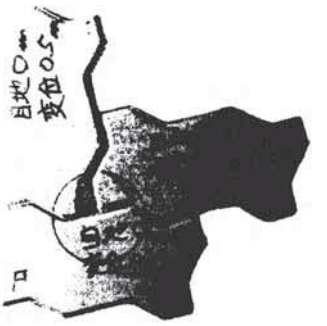

Photo 1 An Example of Chipping of Block

Table 5 Relationship among Deflection on the Surface of Block, Joint Width and Big chipping of Block

Deflection / Joint width	0.5mm	1mm	2mm	3mm	4mm	5mm
Omm	After 100,000 loading	After 50,000 loading	After 40,000 loading	After 50,000 loading	After 40,000 loading	After 40,000 loading
1 mm	Not tested	After 150,000 loading No chipping	After 150,000 loading No chipping	After 150,000 loading No chipping	After 70,000 loading	After 50,000 loading
3 mm	Not tested	Not tested	After 150,000 loading No chipping	After 150,000 loading No chipping	After 150,000 loading No chipping	After 150,000 loading No chipping

*Big chipping: Chipping at more than one place with more than 1 cm^2

The maximum plastic deformation of the block surface at the time of finishing the tests is shown in Figure 4. From that, the maximum plastic deformation of the block surface at the time of finishing these tests fall in the range of 2.5~13.5mm. These figures are almost equivalent to the rutting under the long term service obtained from the results of the site follow-up investigations on interlocking block pavement used for L, A and B traffic categories. Since the rutting width in the tests, however, was as small as 595 mm, the upper edges of block are easier to strike each other thus causing chipping easier compared to rutting on the actual lane. The rutting in these tests was confirmed by the observation after the tests to stem from consolidation and sideward movement of the sand bed.

Elastic deformation on the block surface, change in joint width and depth of loss of joint sand were not so different from the actual roadways.

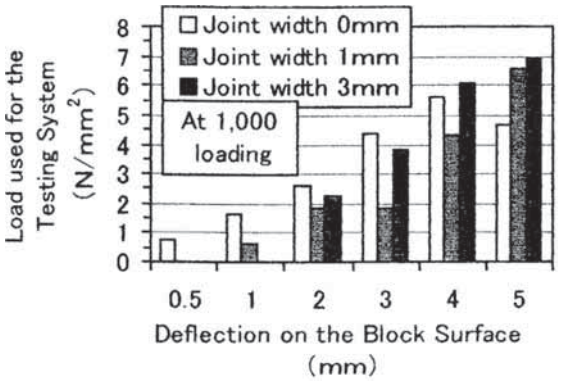

Figure 3 Load used for the Testing System

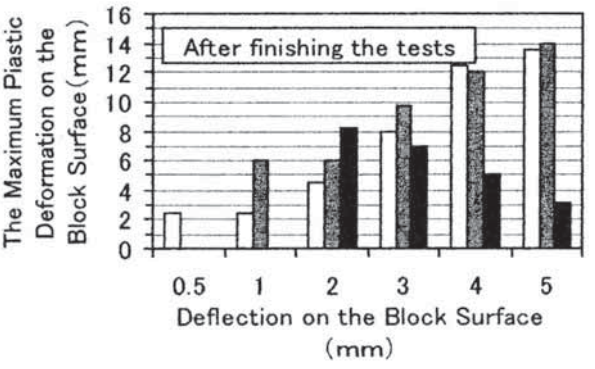

Figure 4 The maximum Plastic Deformation at the time of Finishing the Tests

4. CONCLUSION

It is considered important from the indoor static repeated loading tests done this time assuming the conditions of the actual vehicle travelling to set up the requirements for the control of workmanship as shown below in order to construct roadway pavement without causing chipping of block under a long term service.

4.1 Requirement for Joint Width

The requirements for the control of workmanship for joint width should be less than 1 mm

4.2 Requirement of Deflection on the Block Surface

The requirements for the control of workmanship for deflection on the block surface should be less than 3 mm. Deflection on the block surface can be restrained under 3 mm from the analysis of the results of the site follow-up investigations done by Hata and others if the design CBR-T method is used for the pavement structural design. Deflection on the block surface decreases as the service progresses and it tends to diminish after 6 months ~1 year of service therefore there should not be any problem if deflection of workmanship is less than 3 mm.

5. STUDY ON SHAPES OF BLOCK TO PREVENT CHIPPING OF BLOCK

The results of study on the position and shape of spacer nibs to prevent chipping of block maintaining the joint width of more than 1 mm throughout the design period in Uni N-N type are shown below.

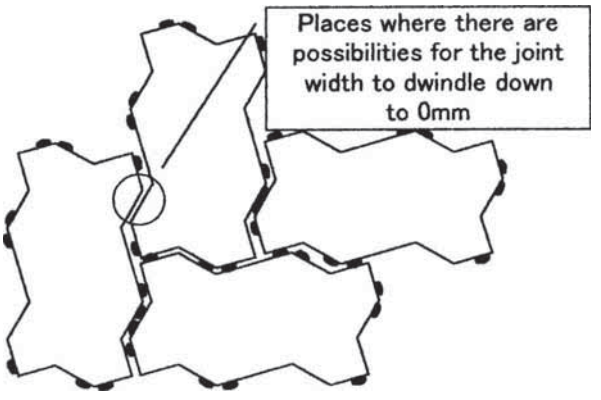

Figure 5 An Example of the Positions of Spacer Nibs in the Present Uni N-N Type

5.1 Problems of the Conventional Spacer Nib

Although spacer nibs are provided on the side of present Uni N-N type of block, there is no standard for the position and shape and blocks with various spacer nibs are used now in the market

It happened, however, that there were places with joint width of 0 mm from the beginning of construction or joint width dwindled down to 0 mm due to the horizontal movement of block under a long term service, depending on the position of spacer nibs. Explanation is given with Uni N-N type used for the tests this time as shown in Figure 2 as an example. This block has 3 spacer nibs on the longish side and 2 on the shortish side. A plan for laying this block in herringbone bond pattern is shown in Figure 5 but the joint width of the point marked ○ in the figure could become 0 mm. This same problem can happen for any other patterns. Less spacer nibs increase the numbers of possible places with 0 mm joint width.

There are many semicylindrical spacer nibs with the width of about 10~15 mm in regard to the shape of spacer nibs as shown in Figure 2 but when these types of spacer nibs are used for the heavy load applications, it sometimes happened that the joint width wore out into 0 mm pursuant to a long term service.

5.2 Results of Investigations on Chipping Occurrence

Figure 6 is an example of the results of investigations on the position of chipping occurrence. As seen, it has been known that the position of chipping occurrence tends to concentrate on the protruding parts including edges and ends.

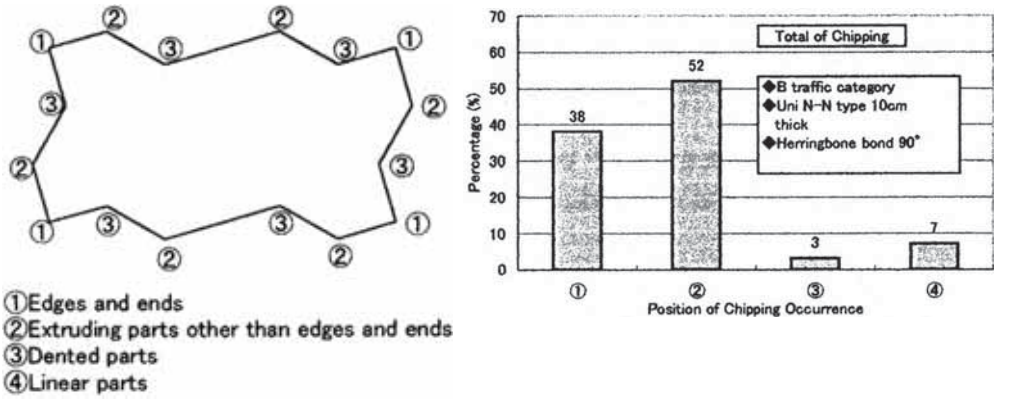

Figure 6 An Example of the Results of Investigations on the Position of Chipping Occurrence

5.3 Idea for Improving Spacer Nibs

Ideas for the position and the shape of spacer nibs for preventing chipping of block maintaining the joint width of 1 mm in Uni N-N type throughout the design period are shown in Figure 7 and Figure 8. The improvement idea 1 of Figure 7 is to provide square-shaped spacer nibs with width of 10~15 mm and thickness of 2.5 mm on both sides close to the top of protruded parts of block. This makes it possible that spacer nibs of adjacent blocks do not come in contact with each other in any laying patterns and that approximately 3 mm joint width all around the block can be secured. Furthermore,

the joint width of the beginning of construction can be secured during a long term service because wearing is reduced compared to the conventional semicylindrical spacer nibs. The reason why the spacer nibs are provided on both sides close to the top of protruded parts of block is to give it an effect to protect the protruded parts. The improvement idea 2 of Figure 8 is to provide spacer nibs so that they cover the top of the protruded parts and it improves wear resistance and a protection effect for the protruded parts more than the idea 1.

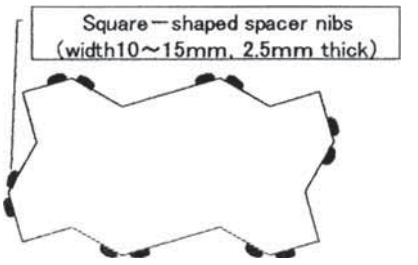

Figure 7 Improvement Idea 1 for Block Shape



Fig 8 Improvement Idea 2 for Block Shape

6. Future Issues for Studying

The following is the issues to be studied in the future based on the test results implemented this time.

① Although the conclusions were obtained from these test results to back up the analysis of the results of the site follow-up investigations that deflection on the block surface and joint width between blocks have great influence on the damage of block, the evaluation is only from these indoor tests. There are many conditions which are different from those of the actual vehicle travelling such as the loading conditions being static repeated loading at the constant position, loading being circular distributed loading with steel plate, load being at much higher level than the actual situation and pavement area being as small as 595 mm x 595 mm. 'therefore, it is considered to be necessary to finally verify by the tests of the actual vehicle travelling that chipping of block in roadway pavement can be prevented during a long term service if the requirements for joint width for the control of workmanship are more than 1 mm and the requirements for deflection on the block surface for the control of workmanship are less than 3 mm.

② Although the suggestions were made this time about the positron and the shape of spacer nibs for preventing chipping of block, it is considered necessary to finally verify the effect by the tests of the actual vehicle travelling.

7. CONCLUSION

Ihe requirements for interlocking block pavement to be used for roadways should be made clearer in the future and further study on various aspects is to be continued for establishing methods of design, construction and control. Last but not least, we wish to express our deepest condolences to Mr. Ikeda who passed away suddenly during writing this paper.

REFERENCES

1. Interlocking Block Pavement Engineering Association, (1994) Design and Construction Manual tor Interlocking Block Pavement(for Roadway), Revised
2. Hata, and Yaginuma, (1992) Applications to Roadways oflnterlocking Block, Pavement, Vol. 27-9, pp. 19-24
3. Ishige, Sekme, Kagata, Utsumi, (1996) Study on Ixrad Distribution of IL Block Pavement, Pavement, Vol. 31-6, pp. 16-22