EXPERIMENTAL BEHAVIOUR OF CONCRETE BLOCK PAVEMENT WITH INCREASED RESISTANCE TO HORIZONTAL SHIFTING

Krass, K. and Schnell, S.

Ruhr-University Bochum, Institute for Highways and Railways Constructions,
D-44780 Bochum. Tel: +234/32-27437. Fax: +234/32-14152.
E-mail: sue@ruhr-uni-bochum.de

ABSTRACT

Occuring damages of pavement surfaces caused an augmented research work. Typical damage symptoms are too large vertical permanent deformations as well as obvious horizontal shifting. This shifting is heavily influenced by the design of stones so that development of new stone designs is a logical consequence.

In this research project decorative paving stones named VS 5 were tested. VS 5 is a shaped paving stone having shifting prevention measures on five sides in order to reduce horizontal shifting. To scrutinise this test beds were built in a road testing machine and resulting deformations were measured. Horizontal shifting resistance was determined by spread tests. Moreover infiltration measurements were made. Completing the resistance of joint filling material against sucking and washing out effects was examined.

In this report, the methodology of investigations and results are explicitely presented. Conclusion can be drawn that the optimal geometry of these paving stones affects a heightened horizontal shifting resistance.

1. INTRODUCTION

When taking a closer look to paving stone pavements, it is very important not only to consider vertical permanent deformations but also horizontal shiftings which appear heightened at stopping points (because of acceleration and deceleration processes) and curves or downward runs.Previous investigations have shown that the shape of the stone has a great bearing on horizontal shifting resistance. Therefore a research project dealing with pavements consisting of decorative paving stones named VS 5 derived from the German description “Verschiebesicherung auf 5 Seiten“ (shifting prevention on 5 sides) was carried out by the Ruhr-University Bochum. These investigations concerned the determination and analysis of the deformation performance of different test beds during a roll-over test with a truck wheel in order to scutinise the effect of shifting prevention measures on horizontal shifting. Besides sucking and washing out-effects on joints were examined.

2. TECHNOLOGICAL DESCRIPTION OF THE ROLL-OVER TEST WITH TRUCK WHEEL

The construction of the road testing machine (called RUB-StraP, derived from the name Ruhr-University Bochum and the German equivalent for road testing machine) is schematically illustrated in Figure 1. The tests were carried out by loading with a single wheel.

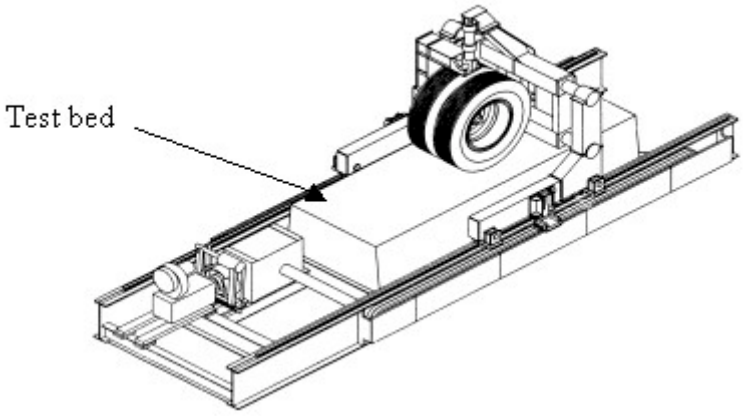

Figure 1. Schematic of the RUB-StraP (Koch, 1999).

Test beds are built in full size in a steel trough. The dimensions of the test bed can be taken from Figure 2.

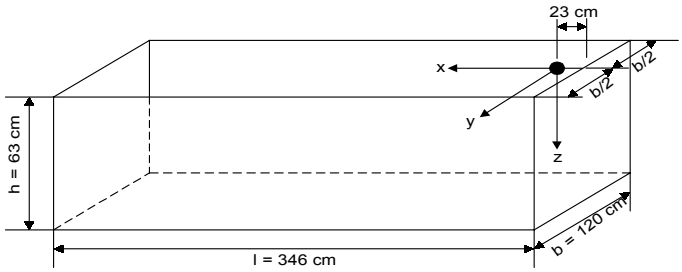

Figure 2. Not full scale drawing of test bed with designation of point of origin and dimensions.

The test bed is loaded by a truck wheel rolling over it in one direction. The pavement construction of test beds is according to the German Directives (FGSV, 2001), traffic class III. In doing so the thickness of subbase results in the maximum height of test bed (63 cm).

3. INVESTIGATION OF TEST BEDS IN THE RUB-STRAP

For each test bed horizontal shifting in driving direction and across the driving direction as well as vertical permanent deformations were collected before the beginning of the load applications and after certain load applications. Moreover the horizontal shifting resistance was measured with the spread test after the end of overall load as well as infiltration measurements were made.

3.1 Spread test

The horizontal shifting resistance can be measured by the so called spread gear. A chart is given in figure 3. The spread gear applies horizontal loads in the block pavement progressively and resulting horizontal shifting is measured steplessly. After the relief of the testing area permanent displacement is measured.

3.2 Infiltration measurement

The so called Tropfinfiltrometer (Drip Infiltrometer) is a method for the examination of water permeability in situ. It measures the amount of percolation on a defined surface in regard to the appropriate time unit. Figure 4 shows the schematic of the Tropfinfiltrometer (Drip Infiltrometer).

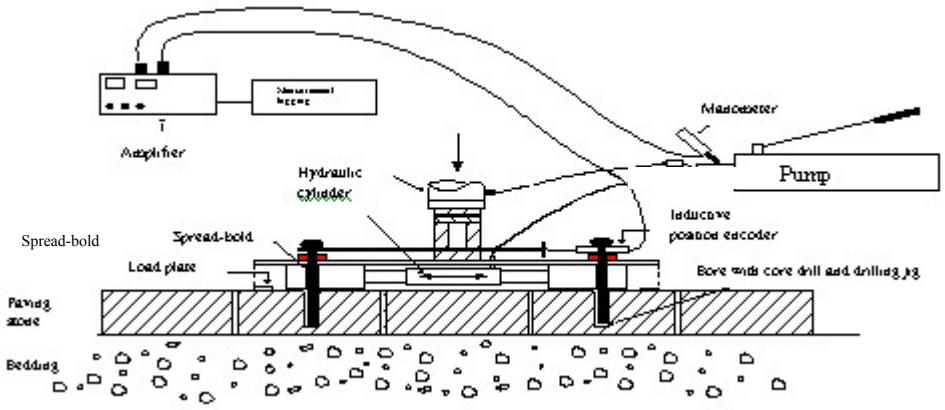

Figure 3. Schematic of the spread gear (Rohleder, 2002).

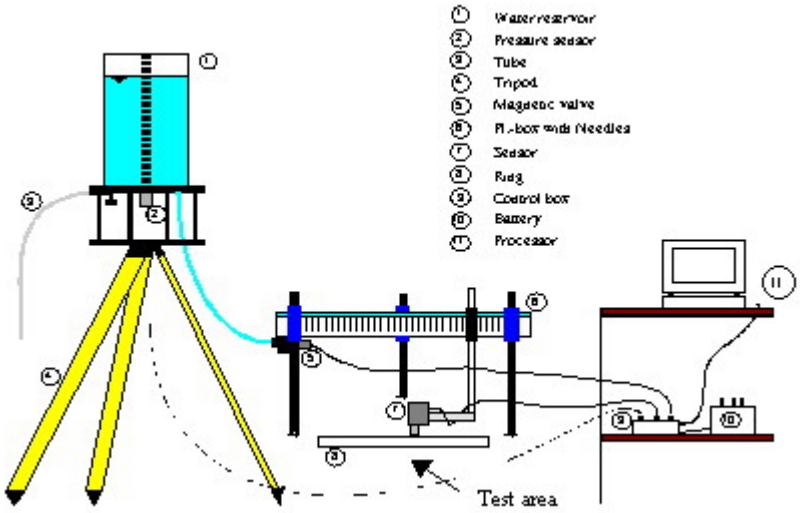

Figure 4. Sketch of the Tropfinfiltrometer (Krass, Stoppka, Willmeroth, 1999).

Before the beginning of the measurement a steel ring with defined dimensions is placed on the test area and scaled up at the outside. A plexiglass-box is adjusted above the test area. On its bottom side needles are arranged concentrically through which water is passing in form of drops and rains on the round test area. Water supply is warranted by a water reservoir.The water flows controlled by a magnetic valve through a tube into the plexiglass-box. During the sprinkling process a slack flow arises in the ring which is kept constantly by dint of a sensor and a magnetic valve. The amount of water being spoiled by raining is recorded by a pressure sensor. The pressure altitudes are forwarded to a processor which converts the digital signals into ml and displays the rates of infiltration in e.g. [ml/min].

4. RESEARCH PROGRAM

4.1 Overview of the test beds

Three test beds were examined which essentially differ in the arrangement of underside profiles in reference to the direction of load application (see Table 1). Additionally the type of paving stones, the installation pattern, the width of joints, the bedding and the joint filling material are listed.

Table 1. Overview of the test beds.

Test bed	Pavement stones	Type of paving	Installation pattern	Width of joints	Bedding material	Joint filling material
1	VS 5	Decorative paving stones	Stretcher bond across, Profiles across the driving direction	3 to 4 mm	Crushed aggregates 0/5 mm	Crushed aggregates 0/5 mm
2			Stretcher bond across, Profiles in driving direction			Sand 0/2 mm without oversize
3			Stretcher bond across, Profiles across and in driving direction			

4.2 Paving stones

Squared profiled concrete paving stones named VS 5 were used. These stones have shift prevention measures on their sides and the underside which leads to a special joint geometry. Their dimensions are 296 x 296 x 88 mm (Grid size 300 x 300 mm). The formation of joint and the details of this paving stone system are shown in Figure 5.

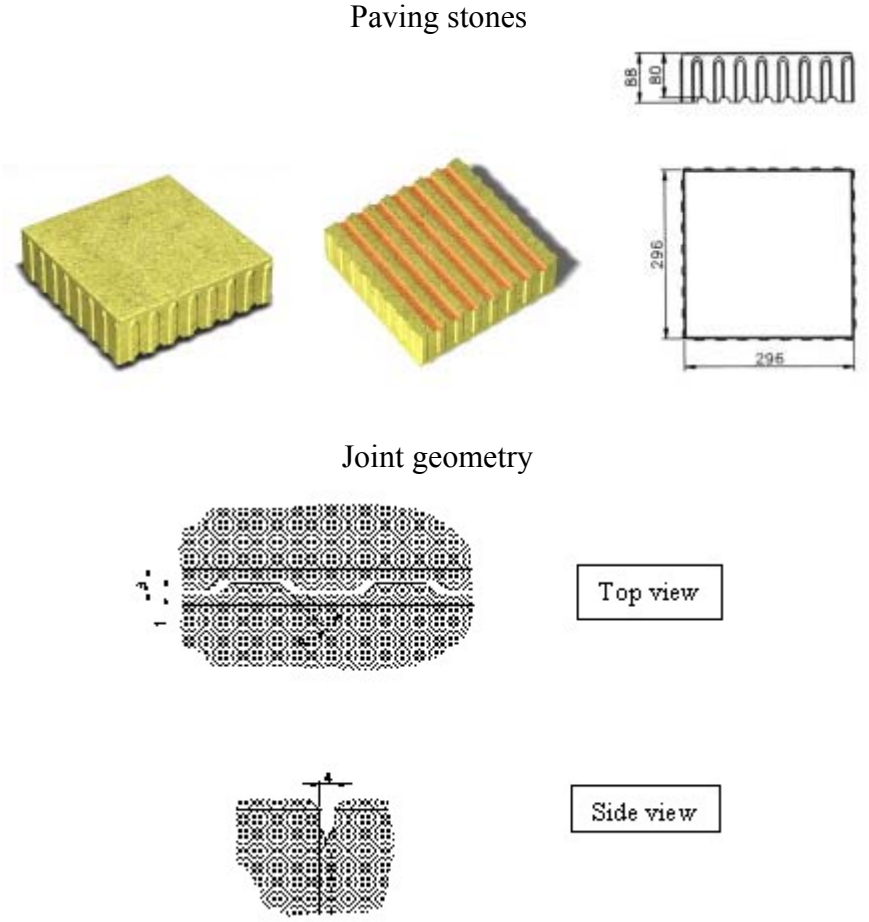

Figure 5. Dimensions and joint geometry of VS 5 (measurement in mm).

4.3 Loadings of the test beds

The following adjustments of the RUB-StraP were chosen for all test beds. The test beds were subjected to 30000 load applications with a 40 kN single wheel load. During the last 4500 load applications brakes were applied every tenth roll-over. The wheel was transferred from the middle rightwards and to the left in order to avoid a narrow wheel track during the undamped load applications. Altogether 25500 undamped load applications were carried out and five measuring times were determined (0, 750, 3000, 11250 and 25500 load applications).

Afterwards the test beds were overrolled 4500 times applying the brakes. Measuring times were 26620, 27750, 28870 and 30000 load applications. At all measuring times the measurement, specified in chapter 3, 3.1 and 3.2 was taken.

4.4 Investigations of washing and sucking out of joint filling material

In an open-air test bed (dimensions 2,40 m x 3,10 m) two different paving stone systems and different joint filling materials (crushed sand 0/2 mm and crushed aggregates 0/5 mm) were examined simultanously. In addition to the VS 5, a concrete paving stone (called "Comparable stone") was used which dimensions and material confirm to VS 5 but which did not have shift prevention measures. The longitudinal gradient was selected at 3 %. The sprinkling of the pavement was realised by a sprinkler which was placed in the middle of the test area. The required amount of sprinkling was controlled continously and kept constant. Two simulations were made for each joint filling material. The test concerning the effects of sucking was accomplished via a wet and dry vacuum. The power rating of sucking was modified according to the age of paving stones. In order to concentrate the maximum sucking capicity on the joint zone, the all-purpose tool was conducted in such a way that the suction tube is situated above the middle of the joint. In order to load the longitudinal joints as well as the transverse joints the paving stones were sucked longitudinally and laterally.

5. TEST RESULTS

5.1 Vertical permanent deformations

The transverse profiles for the determination of the vertical permanent deformations were taken from 5 cross sections at the 9 measuring times. These 5 transverse profiles were averaged to a resulting transverse profile. The results of the averaged transverse profiles are shown exemplarily in figure 6. A negative sign is in accordance to a settlement. The abbrevation "LA" means "load applications".

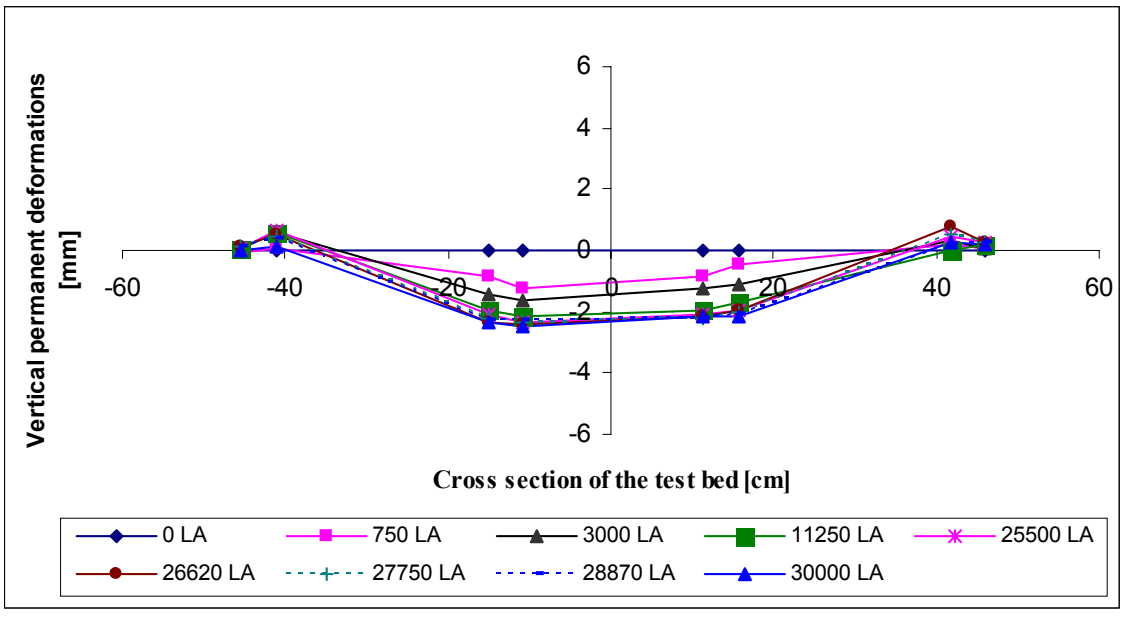

Figure 6. Exemplary diagram of the transverse profile (arithmetic mean of 5 cross sections) of VS 5.

In Table 2 the arithmetic means of all cross sections of the three test beds are listed.

Table 2. Arithmetic means for vertical permanent deformations [mm].

Number of load applications	Test bed		
	1	2	3
0	0	0	0
750	-0,52	-1,10	-1,23
3000	-0,76	-1,33	-1,74
11250	-1,19	-1,61	-2,19
25500	-1,24	-1,49	-2,30
26620	-1,27	-1,58	-2,24
27750	-1,32	-1,59	-2,22
28870	-1,37	-1,60	-2,18
30000	-1,46	-1,61	-2,13

5.2 Horizontal shifting

The longitudinal horizontal shiftings were measured in 5 cross sections and at 9 measuring times. Figure 7 exemplarily illustrates the longitudinal horizontal shifting. The averages of all cross sections of the three test beds are stated in Table 3.

Table 3. Arithmetic means for longitudinal horiontal shifting [mm].

Number of load applications	Test bed		
	1	2	3
0	0	0	0
750	0,80	0,73	1,00
3000	1,23	0,83	0,93
11250	1,20	0,80	1,10
25500	1,67	0,90	1,27
26620	1,70	0,90	1,53
27750	1,70	0,97	1,57
28870	1,67	1,00	1,40
30000	1,53	0,50	1,50

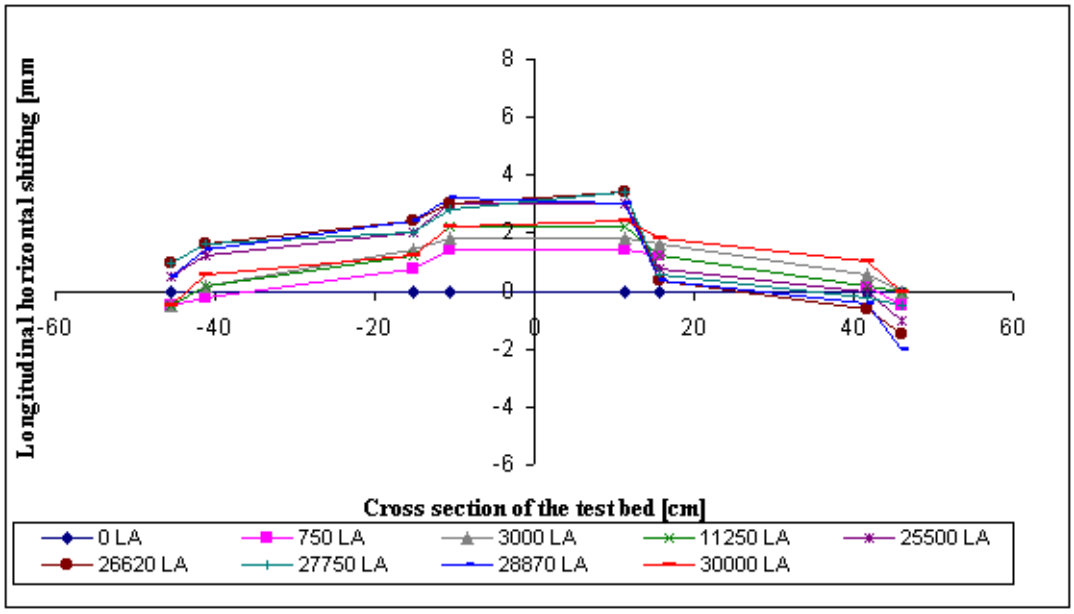

Figure 7. Exemplary diagram of the longitudinal horizontal shifting (arithmetic mean of 5 cross sections) of VS 5.

The determination of transverse horizontal shifting corresponds concerning the measuring times and points of measurement for longitudinal horizontal shifting. The averages of all test beds are listed in table 4 with disregard of the moving direction.

Table 4. Peaks of horiontal laterally shifting [mm].

Number of load applications	Test bed		
	1	**2**	**3**
0	0	0	0
750	1,00	1,50	1,00
3000	1,00	0,60	1,00
11250	1,30	0,60	1,30
25500	1,00	1,00	0,80
26620	1,00	1,00	1,00
27750	1,00	1,00	1,00
28870	1,00	1,00	1,00
30000	1,00	1,10	1,00

5.3 Horizontal shifting resistance

After 30000 load applications the horizontal shifting resistance was measured on all test beds by the spread gear in the track. Thereby paving stones were spread in direction of loading. The analysis of the spread test demands the graphic of resulting horizontal shifting in dependence of the applied horizontal load. The valuation of the horizontal shifting resistance refers to the gradient angle of the calculated regression line. The planer the curve the higher is the horizontal shift resistance. The results of the spread tests are shown in Table 5.

Table 5. Results of spread tests.

Test bed	Max. shifting [mm]	Permanent shifting [mm]	Gradient angle [°]
1 (Profiles across driving direction)	5,9	2,5	14
2 (Profiles in driving direction)	4,7	1,4	10
3 (Profiles across and in driving direction	4,8	1,1	10

5.4 Infiltration measurements

At the end of load applications, infiltrations rates of the test beds were measured via the Tropfinfiltrometer (Drip Infiltrometer). The results of infiltration tests are illustrated in Figure 8.

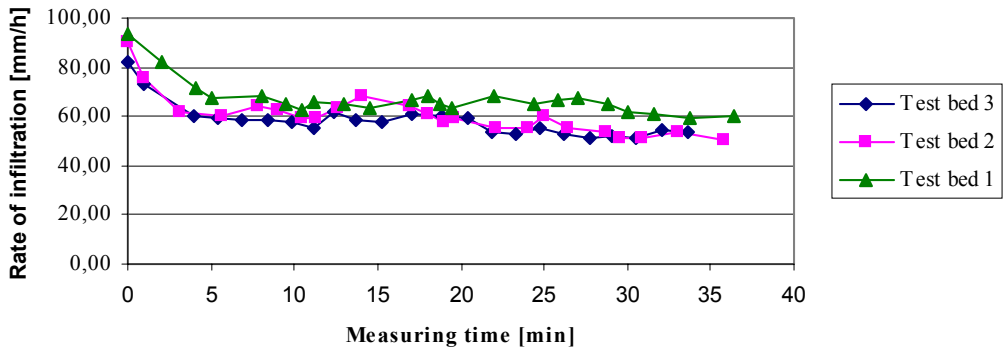

Figure 8. Results of the infiltration measurements.

5.5 Effects of washing and sucking out of joint filling material

In Figure 9 the degree of joint filling (percentage of remaining joint filling material after sucking and washing out) is illustrated for different stones and different joint filling materials, while in table 6 the amount of sucked out material is listed. “Comparable stone” refers to the stone described in paragraph 4.4.

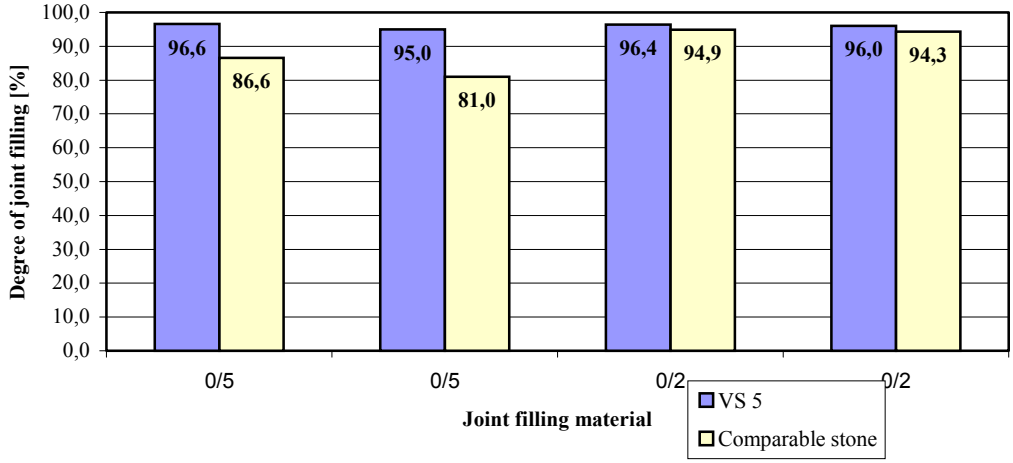

Figure 9. Degree of joint filling [%].

Table 6. Results of sucking tests.

Joint filling material	0/5 mm		0/2 mm	
Pavement stone	VS 5	Comparable stone	VS 5	Comparable stone
Sucked out material [g/m²]	48,3	69,8	12,8	16,8

6. ANALYSIS OF RESULTS

6.1 Vertical permanent deformations

At the beginning of load applications the vertical permanent deformation increases quickly, subsequently growth becomes smaller till it ends seemingly to a final value. Between two thirds and three quarters of overall vertical permanent deformation are achieved after 3000 load applications. After 11250 load applications the final vertical permanent deformation is nearly reached. An influence of load applications where brakes are applied can't be stated what indicates a good interlocking performance of the paving stone VS 5. The maximum arithmetic means are marginal and not visually apparent. The test bed 1 has the lowest vertical permanent deformation at the end. Nevertheless the joint filling material (crushed aggregates 0/5 mm) has to be replaced because the whole material couldn´t brought into the joint. Moreover joints got empty during the load applications. These problems could be solved by the application of sand 0/2 mm. In this way the vertical permanent deformation changed only marginally. The greatest vertical permanent deformation occurs at test bay 3 where the profiling of paving stones lies in turn in direction of loading and across the direction of loading. Altogether vertical permanent deformations of decorative paving stones VS 5 are very small. It is favourable to install the stones so that the underside profiles are arranged homogenously.

6.2 Longitudinal horizontal shifting

Analysis of longitudinal horizontal shifting makes it clear that test bed 1 differs from the test beds 2 and 3. It is the only one showing a load dependent behaviour which means that influence of load applications where brakes are applied can be stated. Till commencement of the load applications where brakes are applied, 2/3 of the overall longitudinal shifting accumulate.

The maxima of arithmetic means after complete loading are situated in the rolled-over-sector and are with values from 3 mm to 3,4 mm greater than these of the test beds 2 and 3. This fact refers to the arrangement of underside profiles. The general tendency of the pavement stones to move in direction of loading can be ascertained. The test bed 2 features the best interlocking performance and the lowest longitudinal horizontal shifting. The arithmetic mean of measuring cross sections reaches a peak of 1,6 mm in the track which can be classified as very small. Due to the shift prevention measures a good interlock can be reached so that as a result of loading not single stones are displaced (like in test bed 1 and 3) but the whole row equably. This installation pattern causes a good interlocking performance and a high horizontal shift resistance because of the fact that bedding material in the pavement increases the coefficient of friction in the shear joint for horizontal loads and driving direction. The investigation results for test bed 3 are between the results of test bed 1 and 2. Overall longitudinal horizontal shifting is very small. To accomodate it as the best solution, stones should be installed so that underside profiles are adjusted in direction of load application.

6.3 Horizontal lateral shifting

All measured values are very small. Their arithmetic means are less than 2 mm. A change of position of the stones can't be recognized visually. The horizontal lateral shifting of the three test beds is almost equal. The reason for this fact is probably the same installation pattern (stretcher bond across) and depending on this the similar manner of load dissambly of the stones bracing. Influence of the underside profiles can't be stated. The order of magnitude of maximum shifting is negligibly small and is partially within the assumed measurement error so that a continutive evaluation doesn't seem to make sense.

6.4 Horizontal shifting resistance

For the test beds 2 and 3, similar but lower maximum values for shifting, permanent shifting and gradient angles were measured than for test bay 1. It can be assumed that different results are not caused by varied joint filling material but primarily by the adjustment of profiling. The conclusions of spread test align with the observations made in analysis of longitudinal horizontal shiftings. Obviously the arrangement of underside profiles in direction of traffic or in turn in and across direction of traffic should be preferred.

6.5 Infiltration measurement

The infiltration measurements are made for analysis of seepage of in situ paving stone systems. Typical curve progressions arise from all tests. The greatest initial value and end value of the rate of infiltration is reached by test bed 1. Test beds 2 and 3 are similar and have lower rates of infiltration. Different values are the consequence of varied joint filling material. Based on previous experiences with infiltration measurements it can be stated that the middle end value of the rate of infiltration appears to be very low for a “young“ pavement surface.

6.6 Investigations of washing out and sucking out of joint filling material

The pavement VS 5 reaches better results than the comparable stone. Especially in the joints being parallel to the flow direction it becomes clear that water in the lineal joint geometry of the comparable stone reaches higher speed than in angled joints of VS 5. The stone VS 5 comes off well concerning transverse joints. Different joint filling materials reach similar results for VS 5 but vary for the comparable stone where joint filling material 0/5 mm shows the worst value. Comparing the different simulations it can be stated that washing out effects decrease with the number of simulations. Regarding investigations of sucking out of joint filling material the stone VS 5 reaches better results due to the special joint geometry.

7. CONCLUSIONS

Overall the three test beds examined in the RUB-StraP show only small vertical permanent deformations compared to previous test results with other paving stones (e.g. Koch, 1999). It is profitable to adjust underside profiles in one direction. Contrary to previous investigations of paving surfaces in the RUB-StraP an influence of load applications where brakes were applied can't be stated. This fact is the case for two of the three test beds concerning longitudinal horizontal shifting, too. They are also classified to be small. It is eye-catching that in part the whole cross section is moving homogenously instead of single stones. This points at a good interlocking performance of VS 5 paving stones. Thereby the best test results are reached by test bed 2 where profiling is arranged in direction of the applied load. This phenomenon initiates further research work. The direction of lateral horizontal movement doesn't obey to any systematics. Admittedly the maximum shifting in all test beds is negligibly small and isn't concidered further. The results of longitudinal horizontal shifting are affirmed by the results of the spread tests. All test beds feature a comparative great horizontal shift resistance. Infiltration measurements show that the examined pavement surfaces are permeable. But results according to their magnitude can only be classified to a limited degree because for example influences of weather can't be practically simulated in the RUB-StraP and because no comparable infiltration measurements have been conducted in the RUB-StraP. Tests in situ are recommended. Recapitulating it can be stated that shift prevention measures on the sides and underside and the special joint geometry lead to an exellent interlocking performance so that by comparing the results of other paving surfaces in the RUB-StraP, lesser permanent deformations and shiftings occur. The application of sand 0/2 mm as joint filling material is advantageous which is affirmed by tests on sucking and washing out of joint filling material. As conlusion of these tests VS 5 has to be preferred because of its higher resistance against sucking and washing out compared to a stone with a common joint geometry.

8. REFERENCES

Forschungsgesellschaft für Straßen und Verkehrswesen (FGSV), 2001. Directives for Standardisation of Highway Pavements, issue 2001

Koch, C., 1999. Bearing of paving surfaces. Institute for Highways and Railways Constructions Bochum Dissertation.

Krass, Stoppka, Willmeroth, 1999. Infiltration measurements on permeable layers. Straße and Autobahn, 11 p.601.

Rohleder, M., 2002. Horizontal shiftings of paving surfaces and their visualisation. Institute for Highways and Railways Constructions Bochum, Dissertation.

EXPERIMENTAL BEHAVIOUR OF CONCRETE BLOCK PAVEMENT WITH INCREASED RESISTANCE TO HORIZONTAL SHIFTING

Krass, K. and Schnell, S.

Ruhr-University Bochum, Institute for Highways and Railways Constructions,
D-44780 Bochum. Tel: +234/32-27437. Fax: +234/32-14152.
E-mail: sue@ruhr-uni-bochum.de

CURRICULUM VITAE
Prof. Dr.-Ing. Klaus Krass

Born 1940:- at Heidelberg/Germany
1959 – 1964:- Studies of Civil engineering at University of Karlsruhe/Germany
1971:- Graduation as Dr.-Ing. at University of Karlsruhe/Germany
1971 – 1984 Researcher at German steel industry
Since1984:- Professor at University of Bochum/Germany Head of Institute for Highway and Railways Constructions
Main research fields:

- pavements
- technical and environmental problems of recycled materials

Since1996:- Chairman of European Standardisation Committee TC „Road materials“