# THE INTRODUCTION OF PRECAST CONCRETE BLOCK PAVING INTO THE SOUTH AFRICAN COAL MINING INDUSTRY.

P. St. C. Michau Pr. Eng. — Managing Director
D. Wilson Pr. Eng. — Director
Concor Technicrete (Pty) Ltd

SUMMARY.

Efforts being made by the South African Coal Mining Industry to improve working conditions, safe and its competitiveness in the domestic and international markets requires their management continually analyse all aspects of their operations.

In many instances, this has resulted in even the most innovative and progressive managers looking new concepts, to new products and to new systems in order to achieve their objectives.

An area of particular concern has been the construction and maintenance of access and haulage roa on the mines. Traditionally, these roads have either been unsurfaced or have been surfaced vi gravel. The desire to achieve improved levels of safety and productivity has led the mining indust to look critically at the performance of these roads and to consider alternative methods of constru tion.

This paper presents a discussion of the introduction, through two unique applications, of concre block paving in the coal mining industry.

The first concerns the construction of an access road in an underground mine while the second de cribes the construction of a trial section of a block pavement on a large open-cast mine haula road.

The paper discusses the structural and geometrical aspects of the design of the pavements, discusses the planning and co-ordination required during construction and illustrates that the use concrete block paving is indeed a viable solution to the pavement requirements of the mining industry.

## 1. UNDERGROUND ACCESS ROAD.

### 1.1 Introduction.

Underground operations in coal mines within South Africa necessitate the use of roads along which men, materials and machinery are transported between the inclined entrance shafts and the mine workface.

The desire to increase productivity and to reduce maintenance costs, without sacrificing safety, demands that transportation of the above resources takes place at higher speeds on smooth, well constructed underground roads.

In order to assess the feasibility of a concrete block paving alternative, a South African mining group employed the Contracts Division of a large block manufacturing company to undertake the design and construction of a 2km long section of an underground access road in one of its coal mines in the Eastern Transvaal.

### 1.2 Pavement Alternatives.

Traditionally the underground roads are unsurfaced using either the rough bedrock or an imported layer of crushed rock as the riding surface. This results in transportation bei uncomfortable, slow and extremely costly respect of maintenance to the mine vehicles.

In an endeavour to improve this situation t mines have recently resorted to the use insitu concrete for the construction of t roads. However, a number of problems are a sociated with this method of construction, particular :-

(i) quality control of the concrete mixing a placing is extremely difficult.

(ii) the uneven nature of the surface of footwall (floor) utilises high volumes of c crete to make up the levels, with obvious c implications.

(iii) major logistical problems with the und ground handling of materials.

(iv) the necessity for opening the road traffic as soon as possible often does allow enough time for the concrete to c sufficiently and thus results in structu failure.

Precast concrete blocks offer distinct advar

tages in most of the above areas of concern. The only aspect which the mine officials regarded as unknown was the structural integrity of a block pavement and its performance in underground conditions. The construction of the trial section of road was therefore an ideal opportunity for the mine's technical personnel to assess the all-round performance of block paving in respect of their particular requirements.

1.3 Design Considerations.

Table 1 summarises the various vehicles and their respective loading characteristics which the road is expected to carry during its 15 year design life. The technical information for each vehicle was obtained from the manufacturer's specifications.

| DESCRIPTION | NO. OF AXLES & TYPE | AXLE LOAD (KG) | REPETITIONS | TYRE PRESSURE MPa |
|---|---|---|---|---|
| 1. L.H.D's/ LOADERS | | | | |
| a) EIMCO 913 (LADEN) | 1 FRONT<br>1 REAR | 15250<br>4730 | 170000<br>170000 | 0,414<br>0,31 |
| b) EIMCO 925 (LADEN) | 1 FRONT<br>1 REAR | 16975<br>11225 | 60000<br>60000 | 0,414<br>0,414 |
| 2. TRANSPORT | | | | |
| EIMCO 922 (LADEN) | 1 FRONT<br>1 REAR | 9250<br>5320 | 42000<br>42000 | 0,31<br>0,31 |
| 3. TRACTOR | 1 FRONT<br>1 REAR | 2600<br>4320 | 170000<br>170000 | 0,31<br>0,33 |
| 4. LAND-CRUISER | 1 FRONT<br>1 REAR | 1500<br>1800 | 42000<br>42000 | 0,2<br>0,2 |

* All tyres are single configuration.

TABLE 1. VEHICLE LOADING CHARACTERISTICS.

Of particular interest in the structural design is the fact that the footwall which is generally a highly competent rock, such as sandstone, has depressions which can be as deep as 300mm. Therefore, in the design, the main concern was one of preventing deflections on the surface of the road due to differential settlement of the subsurface layers rather than one of structural competency of the insitu foundation material.

In order to reduce the risk of differential settlement, it was considered necessary to specify a minimum thickness of subbase layer of 150mm. Depressions in the rock were to be filled to level by using the same material compacted in layers not exceeding 150mm in thickness. The material used in the subsurface layers was a ferricrete compacted to achieve a C.B.R. of 60%.

However, difficulties experienced during ear stages of construction resulted in the ferr crete layer, which was found to be adverse affected by contamination of coal dust a other inferior materials present undergroun being replaced by crushed stone subsurfa layers on the remainder of the road.

After consideration of the loading requiremen and the possibility of some minor subsurfa movement, it was considered that 80mm thi precast concrete blocks Type S-A (geometrical interlocking along all faces) laid in a he ringbone pattern would be adequate for t purpose.

The blocks were specified to comply with SAI 1058-1985 (1) and were to have an average 7 day wet compressive strength of 25 MPa.

Several different sources of river sand wer investigated in order to ensure that the san available for bedding sand would comply wit the recommended grading envelope from NITR Report RP/9/84 (2). Table 2 summarises th grading analyses of the sands investigated.

| SIEVE SIZE | NITRR RP/9/84 RECOM & PASSING | SOURCES AND % PASSING | | |
|---|---|---|---|---|
| | | VAN DER MERWE | TROLLIP | BOTHA |
| 9,52mm | 0 | 99,6 | | |
| 4,75mm | 95 - 100 | 97 | 99 | 100 |
| 2,36mm | 80 - 100 | 75 | 80 | 82 |
| 1,18mm | 50 - 85 | 48 | 58 | 54 |
| 0,60mm | 25 - 60 | 27 | 39 | 32 |
| 0,30mm | 10 - 30 | 6 | 21 | 17 |
| 0,15mm | 5 - 15 | 1 | 9 | 9 |
| 0,075mm | 0 - 10 | - | 7 | 6 |

TABLE 2: BEDDING SAND GRADINGS.

It was decided to use the sand from BOTHA

The management of both surface and subsurfac water is a vital consideration in any roa design. By its very nature, the control o water underground is of particular concern an must be adequately addressed. Since the longi tudinal profile of the road depends on th inclination of the coal seams, this can fre quently result in the direction of the grade o the road changing and thus the design of th underground drainage has to take into conside ration the existence of localised sections o road which are subject to water accumulation.

As far as possible therefore, the water wa collected at low spots and directed int 'splits' (unsurfaced tunnels running perpendi cular to the access road at approximately 20 centres). It was important to ensure that thi water was not allowed to accumulate in th close vicinity of the road in order to preven it from infiltrating the subsurface layers.

general, the splits managed to drain the er away from the road. However, in cases re this run-off was inadequate, the fol-ing alternatives were considered:

) construction of a sump pit from where the er is pumped out of the area

) elevating the road and shaping the side its such as to be able to drain the water ay from the pavement

general, the road was designed to have a nimum longitudinal grade of 1% and a ossfall in one direction of 2%.

ge restraints did not generally present any oblems as it was only necessary to construct cast insitu section of infill concrete be-een the blocks and the sidewalls. Generally ese restraints were 500mm wide and 200mm deep d constructed of 25 MPa concrete mixed under-ound (see Figure 1).

gure 1 shows a typical cross-section through underground road.

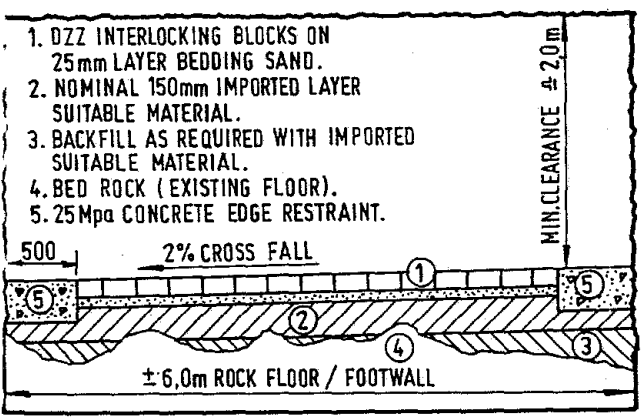


IGURE 1: CROSS-SECTION THROUGH ROAD.

.4 Geometric Design.

he main constraint in the geometric design of he access road is one of minimum headroom.

part from using low profile production mac-inery, the mine wanted to introduce specially onstructed buses for the transportation of ersonnel to the workface. It was necessary herefore that the surface of the pavement was ot too high so as to interfere with the mini-um headroom clearance of 2,0m. In practice his minimum clearance was occasionally in-reased to accommodate ceiling attachments such s sprinkler systems and light fittings.

t was necessary that consideration be given to he adoption of a vertical alignment which ould be suitable for providing a smooth ride t speeds of up to 60 km/hr. Therefore, abrupt hanges of grade had to be avoided. Other ertical alignment considerations were neces-sary in order to deal with drainage as discussed in Section 1.3.

1.5 Pavement Construction.

Once the alignment of the road had been designed, existing traffic was deviated into a parallel tunnel so as not to disrupt coal production during construction operations.

Although the design and construction of the pavement was the responsibility of the Contracts Division of the block manufacturing company, it was decided by both parties that the construction of the subsurface layers would be undertaken by the mine themselves.

The standard of sub-base material and its compaction was nevertheless monitored closely by the Contracts Division personnel in order to ensure that it complied with the specifications.

As this particular coal mine is rated as a fiery mine, it was necessary to procure specially manufactured diesel and electrical flameproof compactors for use on the earthworks and the blocks.

The mine personnel constructed the required subsurface work and although this operation presented a number of quality problems which were a result of the difficult conditions underground and which resulted in the ferricrete material being replaced by the crushed stone, the standard of material and workmanship was ultimately acceptable.

Although there is fundamentally little difference between the construction of an underground road and the construction of a surface road, there is a considerable difference in the logistics of materials handling. The underground road is generally served by one inclined shaft entrance to the mine which dictates that material must be delivered by the mine's specialised equipment to the work area well in advance of any construction activities. A typical sequence of material handling activities are as follows :-

(i) material from factory off-loaded into mine stockyard

(ii) material loaded into mine L.H.D. (underground front-end loader) and transported down inclined shaft

(iii) material tipped adjacent to work area

(iv) material moved by contractor into final position

The above operation required excellent planning and co-ordination between mine personnel and the contractors. This was not always easy when one considers that coal production is the main priority of the mine. In addition a high percentage of breakages and general waste resulted

from the number of times the material had to be handled.

Due to these handling problems and the confined space, particular attention was paid to estimating the quantities of the different materials that would be required and ensuring that they were stockpiled at the correct locations along the road. The side splits were used as storage areas during construction.

Block laying was carried out by a team of 3 layers and 9 unskilled labourers which achieved production rates of approximately 300m2/day. An additional team of 6 labourers were used on the concrete work to the edge restraints.

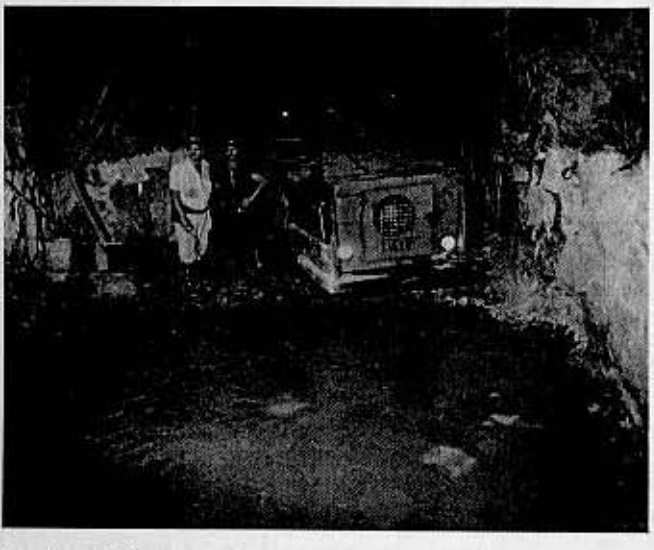

Paving Underground

1.6 Pavement Performance.

At the time of writing, sections of the underground road have been in service for over 18 months.

Where the ferricrete material was used initially for the subsurface layers, there are areas which are showing slight signs of distress. This is considered to be due to the contamination of the material by coal dust and other inferior materials which reduced its load bearing capabilities. However, the majority of the road which was constructed using the crushed stone is performing as required. The management of water on the road has proved successful.

In general, the mine management is extremely satisfied with the performance of the pavement and with the benefits it is already deriving in respect of improved transport facilities and the considerable reduction of maintenance costs.

## 2. OPEN-CAST MINE HAUL ROAD.

### 2.1 Introduction.

Another method of coal mining practiced in South Africa is the open-cast method. This requires numerous haulage roads to be constructed in order to transport the coal from the open-cast mine to the stockpile areas. While some of these roads are operational for only relatively short durations, the main haulage roads are required to serve the mine for design lives of up to 20 years.

Traditionally these roads which are now required to support coal haulers of up to 240t capacity have been well constructed but left unsurfaced. Therefore, they require a great deal of expensive maintenance in order to minimise the wear and tear on the coal hauling vehicles and in particular the tyres which cost approximately R40000,00 each.

One mine in the Eastern Transvaal is presently constructing a new main haulage road which will be used to transport coal from a new open-cast section of the mine. As provincial authorities are becoming stricter as far as the control of dust is concerned and also bearing in mind the costs of road and plant maintenance, the mine management has decided to consider the possibility of surfacing the new haulage road.

In order to assess the feasibility of a concrete block solution for their pavement surfacing, the mine employed the services of the Contracting Division of a large block manufacturer to design and construct a trial section of 4500m2 at a 'T'-intersection on an existing main haulage road. The 'T'-intersection was chosen in order to provide information on the performance of the block pavement under the most harsh operating conditions where severe braking, stopping and turning actions take place.

### 2.2 Design Considerations.

The vehicles using the haul road are predominantly very heavy, off-highway trucks and tractors. The loading data required for the structural design of the pavement was compiled from the manufacturer's specifications and information from the mines themselves. Table 3 summarises the pavement loading data.

| VEHICLE | NO. OF AXLES | AXLE LOAD (KG) | REPET-ITIONS | TYRE PRESS-URE MPa | SINGLE OR DUAL TYRE |
|---|---|---|---|---|---|
| 1. HAULER CAT777 | 3 | 37900<br>85300<br>114000 | 800,000<br>800,000<br>800,000 | 0,68<br>0,68<br>0,68 | S<br>D<br>D |
| 2. DUMPER CAT769C | 2 | 23400<br>47100 | 900,000<br>900,000 | 0,58<br>0,58 | S<br>D |
| 3. SCRAPER CAT631E | 2 | 38100<br>34800 | 11,000<br>11,000 | 0,58<br>0,58 | S<br>D |
| 4. GRADER CAT140G | 3 | 4200<br>5500 | 44,000<br>44,000 | 0,5<br>0,5 | S<br>S |

TABLE 3: VEHICLE LOADING CHARACTERISTICS.

fter careful consideration of the loading and ie conditions under which the pavement would erform, it was decided to specify the use of onventional 80mm interlocking Type S-A blocks ith a 28 day wet compressive strength of 25 Pa.

preliminary soils investigation was carried ut before the designers had full untrafficked ccess to the trial section. In all, 5 test its were excavated, mainly at the edges of the oad due to the danger involved in digging nywhere else. The insitu material was profiled and density tests taken to determine the insitu C.B.R. values.

As shown in Figure 2 it was found that a ferricrete material existed to a depth of 950mm. The test results showed that the material had in-situ C.B.R. values of between 60% and 70% to a depth of 300mm.

As the unsurfaced haul road had been carrying the imposed loading for a period of up to 5 years without signs of distress, it was considered that the existing foundation appeared adequate and that it would be prudent to disturb it as little as possible. However, in order that the finished road surface was at the same level as that at either end of the trial section, it would be necessary to remove at least the top 100mm of material to accommodate the blocks and sand bedding.

The relevant loading data, the characteristics of the blocks and the subsurface material were all used as input to a commercially available computer design package (3) to confirm that the proposed pavement structure would be sufficient. The resulting proposed pavement design is shown in Figure 2.

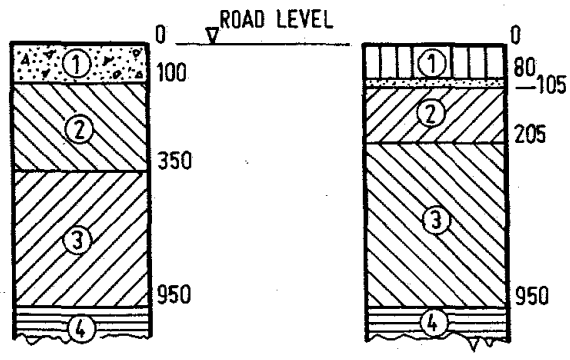


1. MIXTURE OF FERRICRETE AND COAL.
2. IMPORTED FERRICRETE.
3. IN-SITU FERRICRETE.
4. LOOSE, LIGHT BROWN GRANULAR MATERIAL

SUB-SOIL PROFILE

1. 80mm INTERLOCKING BLOCKS ON BEDDING SAND.
2. REWORKED FERRICRETE STABILISED WITH 4% CEMENT C.B.R. 70%
3. UNDISTURBED LAYER FERRICRETE.
4. LOOSE GRANULAR MATERIAL

PROPOSED DESIGN

FIGURE 2: PAVEMENT CROSS-SECTIONS 1.

Once full uninterrupted access was made available to the trial section, a more representative series of trial holes were excavated in order to ascertain the full extent of the subsurface insitu materials. It was then discovered that the depth of the good quality ferricrete material varied considerably throughout the trial section with a relatively loose but nevertheless good quality granular material underlying it (see Figure 3). In establishing the final levels of the road, the following factors were considered important:

(i) the longitudinal fall should not be less than 1% for drainage purposes but, equally, should not be greater than this for the economic use of laden coal haulers
(ii) the cross-fall should be 2% for drainage requirements

The design of the levels was complicated by the facts that the trial section was in a particularly flat area of the haulage road and that the existing haulage road itself did not comply with the minimum cross-fall requirements. It was found necessary to construct a single camber at one end of the section and a double camber at the other with a transitional zone in the middle. In order to accommodate these parameters, it was necessary to carry out substantial reshaping of the section. This, together with the varying thickness of ferricrete prevented the initially proposed economic design from being possible on the majority of the trial section. Therefore a second design was carried out on the computer (See Figure 3). It was considered important that wherever possible the first design proposal be constructed not only for economic reasons but in order to provide information on the performance of a section which required little structural disturbance during reconstruction.

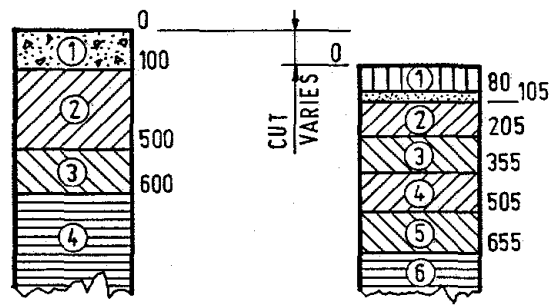


1. MIXTURE FERRICRETE AND COAL.
2. IMPORTED FERRICRETE.
3. MIXTURE FERRICRETE AND COAL.
4. LOOSE, LIGHT BROWN GRANULAR MATERIAL.

SUB-SOIL PROFILE

1. 80mm INTERLOCKING BLOCKS ON BEDDING SAND.
2. FERRICRETE STABILISED WITH 4% CEMENT C.B.R. 70%
3. FERRICRETE COMPACTED TO GIVE C.B.R. 60%
4. IMPORTED LAYER OF FERRICRETE TO GIVE C.B.R. 50%
5. RIP, SCARIFY AND RECOMPACTED SAND TO 95% MOD AASHTO: C.B.R. 35%
6. LOOSE GRANULAR MATERIAL.

PROPOSED DESIGN

FIGURE 3: PAVEMENT CROSS-SECTIONS 2.

Of particular importance in the pavement performance is the integrity of the edge restraints on the trial section. Due to the expected excessive horizontal thrusts imposed by the vehicles, it was necessary to evaluate the structural stability of the restraints to be used. Figure 4 shows a layout of the intersection.

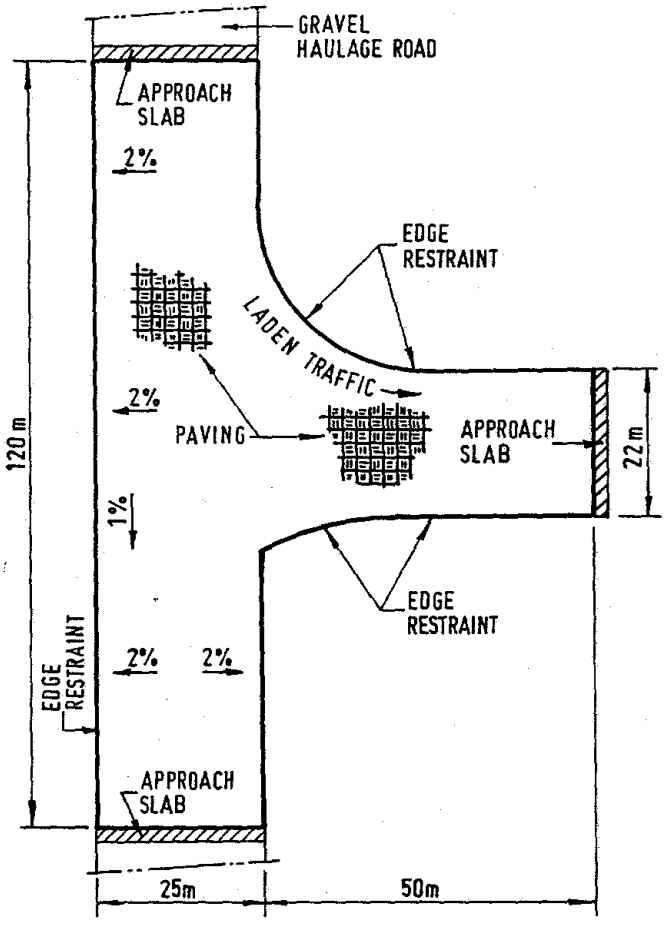


FIGURE 4: PLAN OF INTERSECTION.

The insitu concrete edge restraint was designed using the following criteria and is shown in Figure 5.

(i) Assumed horizontal thrust from vehicle
= 157 kN

(ii) Allowing for dispersion, the load against restraint

$$= \frac{157\text{kN}}{25} = 6{,}28 \text{ kN/m}$$

iii) Resulting acceptable passive resistance of earth = 42 kPa

n approach slab was detailed for the restraint t each end of the trial section where it meets the existing gravel road and is also shown Figure 5.

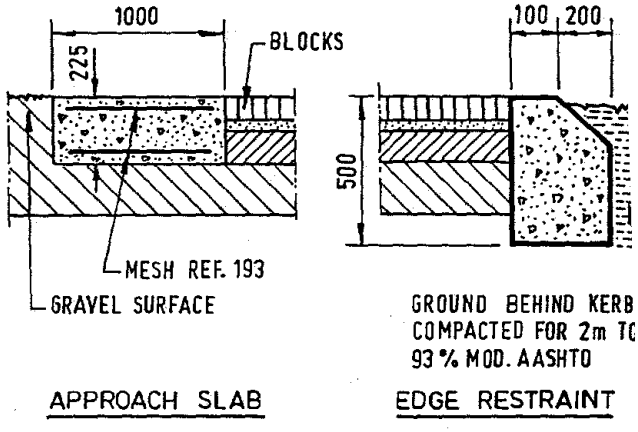


FIGURE 5: EDGE RESTRAINT & APPROACH SLAB.

2.3 Pavement Construction.

While the road was under construction, it wa closed to all mine traffic which was deviate around the trial section along another hau road. The mine stipulated that the construc tion time be kept to a minimum in order t disrupt the normal traffic routes as little a possible.

During initial discussions with the mine, i had been envisaged that the work would take approximately 5 weeks. However, due to the amount of additional earthworks which ultima tely became necessary and the conditions under which construction took place, the actual pe riod was 10 weeks.

The construction activities, while in them selves not of an unusual nature, were ofte disrupted due to mine blasting operations i the vicinity of the trial section. These dis ruptions would require the construction team to leave the site for up to 1 hour at a time.

The conditions were particularly unpleasant a the atmosphere was generally dusty and dirt from the coal mining operations and the heav traffic close by. No problems were experience with either the delivery of materials to sit or the co-operation of mine personnel.

2.4 Pavement Performance.

At the time of writing, the trial section ha been open to traffic for over 6 months.

A few isolated problems have arisen as fol lows:-

(a) short lengths of the block paving immedia tely adjacent to the approach slabs are showin signs of subsidence. This is believed to b due to the particularly punishing wheel force imposed on it as the traffic comes off the .op

concrete surface onto the block surface. It is not considered to be a serious problem as it is localised.

(b) there is evidence of blocks tilting along a line on the inside of the curve where the fully laden vehicles turn. The haulers move around this corner at speeds of approximately 10km/hr and impose severe slewing forces on the paving. The deviation in the blocks is of the order of 4/5mm. It is the opinion of the authors that, in areas such as intersections which are subject to this particular form of loading, the use of 100mm thick blocks would adequately resist the torsional loading imposed by the extraordinary slewing forces.
(c) in general the block surfaces are not showing signs of distress. There are, however, indications of localised spalling of the blocks at the points where they are tilting and at the sections immediately adjacent to the approach slab. This is as would be expected considering the type of structural deformation which has taken place.

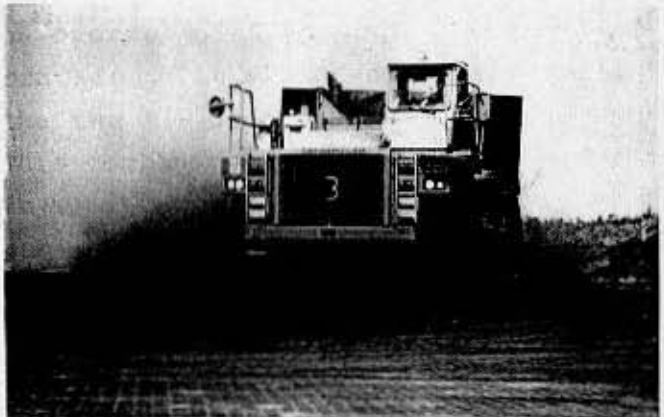

A Heavy Off-Highway Coal Hauler on the Trial Section.

The initial reaction of the mine personnel and the drivers of the haulers was one of disappointment in the rideability of the block surface. However, this was relatively shortlived and was probably due to the 'bump' which was experienced at each approach slab rather than the performance of the general pavement surface itself.

The dust which is caused by the coal spillage on the trial section has been considerable and requires watering in order to control it. However, by the nature of the intersection and the concentration of vehicle turning, it is considered that the amount of spillage is not truly representative of the future predominantly straight haulage road. There is little doubt that watering will still be necessary but the total creation of dust on the block surface will be much less than that on the gravel surface and will be no more than on any other form of pavement surface such as concrete or asphalt.

2.5 Estimation of Maintenance Benefits.

The authors consider that the following are areas in which maintenance benefits can result from the use of a block surfaced haulage road:

(a) during the summer months of October to March, the high rainfall coupled with the high vehicle frequency causes a rapid deterioration of the surface of the gravel roads resulting in vehicles often becoming bogged down with a consequentially higher cost of operation due to downtime. Surfaced haul roads would obviously eliminate this situation.

(b) there would be a considerable reduction in plant required for road maintenance if the roads were surfaced. The following respective plant requirements illustrate this point.

| Gravel Road. | Paved Road. |
|---|---|
| 2 scrapers | 2 mechanical brushes |
| 2 graders | 1 water tanker |
| 3 water tankers | |
| 1 wheeled bulldozer | |

In addition, the cost of water will be considerably less in the case of the paved roads.

(c) the cost of tyres for the vehicles employed by the mine is considerable e.g. the Cat. 777 coal hauler has 10 tyres at approximately R40000,00 each. Any increase in the life of the tyres will therefore result in substantial cost savings to the mine. A comparison of the estimated tyre wear for these vehicles is summarised in Table 4.
The operational factors used in Table 4 were obtained from the manufacturer's handbook (4) and relate to operational conditions as follows:

1. Maintenance
2. Speed
3. Surface conditions
4. Wheel positions
5. Extent of overloading
6. Curves and bends
7. Grades

The factor 'f' in Table 4 is the mathematical product of the 7 factors and gives an estimation of the life of a tyre as a fraction of the life of a tyre under 'ideal' conditions.

In the comparison the only operational factors which were varied were those related to maintenance conditions and surface conditions as the remainder are independent of road surface.

From the two resulting values of 'f' in Table 4 it can be estimated that a tyre will have a 23,5% longer life if the haul road is paved.

(d) fuel benefits can also be expected if the haul roads are paved, all other factors being equal.

| SURFACE | OPERATIONAL FACTOR | | | | | | | PRODUCT 'f' |
|---|---|---|---|---|---|---|---|---|
| | 1 | 2 | 3 | 4 | 5 | 6 | 7 | |
| UNPAVED - GRAVEL | 0,981 | 0,763 | 0,981 | 1,09 | 0,872 | 1,09 | 0,981 | 0,746 |
| PAVED - BLOCKS | 1,090 | 0,763 | 1,090 | 1,09 | 0,872 | 1,09 | 0,981 | 0,921 |

TABLE 4: ESTIMATED TYRE SERVICE LIFE.

Conclusion:

An increasing number of South African mining houses are considering the use of precast concrete blocks for the surfacing of both underground service roads and above ground open cast haulage roads on their mines.

Block paving is now being used in applications on these mines where this type of pavement surface has not been used previously in South Africa.

The pavements have been shown to perform satisfactorily under the extremely harsh and heavy duty mining conditions. Furthermore, they are able to offer a number of benefits to the mine which chooses this type of paving for the surfacing of its roads.

As concrete blocks are manufactured in a factory environment where the strength, surface texture and dimensions can be accurately controlled, it is possible for block paving to offer a highly engineered pavement structure. This is particularly beneficial in mining applications where on-site quality control presents difficulties, where immediate use of the pavement is of particular significance and where there are access problems.

The two block paving applications described here have illustrated that the mining houses can expect a structurally competent pavement and a long term reduction in the operating expenses in the maintenance of the road as well as the cost of maintaining the haulage plant. Furthermore, it will fulfil the requirements of reducing the dust hazards and the risk of accidents.

The applications discussed in this paper are performing very satisfactorily and have provided a great deal of valuable experience and knowledge which will greatly contribute to the technology in the further development of similar applications currently being contemplated.

BIBLIOGRAPHY.

(1) South African Standard SABS 1058-1985 'Standard Specification for Concrete Paving Blocks.

(2) "Structural Design of Segmental Block Pavements for Southern Africa" by J.M. Clifford NITRR, CSIR, South Africa, Report RP/9/84.

(3) Hynchime Computer Based Design System for

Interlocking Concrete Block Pavements, Hynchi (Pty) Ltd, Australia.

(4) Caterpillar Performance Handbook, Editi 15, Caterpillar Tractor Co., Peoria, Illinois U.S.A.