AN EXAMPLE OF PAVEMENT REHABILITATION BY CONCRETE BLOCK PAVING IN EXPANSIVE OR COLLAPSIBLE SOIL REGIONS

Moshe Livneh & karl Ruhm

Professor of Civil Engineering, Transportation Research Institute, Technion-Israel Institute of Technology and Chief Highway Transportation Planning Engineer, Ministry of Housing, Israel, respectively

Summary

In this paper, a rehabilitation solution which has been applied to a major junction in the city of Beth She'an in the Northern Jordan Valley, is evaluated. The junction, which was badly damaged due to the moisture variations of the collapsible silty clays, has been treated in the past by the application of several asphaltic concrete overlays of an accumulated thickness of approximately 20 cm. These conventional solutions failed very rapidly. In contrast, a new solution using concrete block paving of 8cm Uni type laid in a herringbone pattern, gave a successful performance. These blocks were laid after removing about 20cm. of the existing pavement and laying a thin new subbase course and a 3cm sand course. The tentative mechanism of the new rehabilitation solution is described in the paper. One other solution has been applied at an aircraft wash area founded on heavily expansive clay. This wash area's performance is also very satisfactory. Thus, finally, it is hoped that these solutions can be applied to other pavements where the running speed allows the introduction of concrete block paving.

1. Introduction

Extensive areas in the world are covered by clay soils of high swelling potential or silts of high collapsing potentials. These soils are referred to as active clays or collapsible soils due to their behavior when changes occur in their moisture content. The planning of the transportation system in these areas involves the use of clays or silts as subgrade and fill material for roads and airfields, since it is, as a rule, economically unfeasible to bypass the clays or replace the clay with other, more stable materials.

In arid and semi-arid regions, such as Israel, the clay and the silt exist in an unsaturated condition, due to the deep water table. As a result, the soil tends to change its moisture content with seasonal climatic changes or as a result of the placement of a relatively impervious covering layer. This variation in moisture has a detrimental effect on the properties of the soil in its role as the foundation of the road structure. In particular, the volume stability and shear strength properties of the soil are among the more important properties which may be adversely affected.

Starting from 1956, a theoretical and practical engineering experience, has been accumulated, in Israel, as to the construction of pavements on expansive and collapsible soils. The basic research which was started during this period at the Technion, together with the accumulated knowledge of the performance of numerous pavements, led to the crystalization and adoption of engineering solutions in the construction of pavements on expansive and collapsible soils, as given in References 1, 2, 10 and 11.

Generally, the above engineering solutio are too expensive to be adopted for loc transportation networks. Thus, for the projects, the conventional solutions are us leading to the distresses described in t following section.

2. The Common Distress Modes

The phenomena which result from changes the moisture content of the clay subgrade m vary and depend on the type and shape of t pavement. The following, however, may noted: (a) Shrinkage of the clay due drying; (b) Swelling of the clay due wetting; (c) Development of swelli pressures in clay which is confined a cannot swell; (d) Decrease in the streng and bearing capacity of clay as a result swelling.

In general, several phenomena occur at t same time, resulting in deterioration of t pavement, which in turn leads uncomfortable travelling, high maintenan costs, and even, in extreme cases, to failu of the pavement and closure of the road traffic.

The distress modes which are typical pavements built on active clay soils a expressed in the following major types damage: (a) Surface unevenness stretched to long distance, but without cracking or a other visible distress; (b) Longitudir cracks parallel to the centerline; (Excessive deformations or swell upheavals a limited area, i.e., adjacent to undergrou transverse conduits, usually expressed transverse cracking and d) Structu (bearing capacity) pavement failure in restricted area, usually resulting distintegration of the pavement. Similar

analog distress modes exist for pavements built on collapsible soils.
As stated before, avoidance of these distresses is associated with high construction and maintenance expenditures which are beyond the limited budget of any local authority.

3. Objectives

It can be concluded from the above that there is a need for a rational pavement design under limiting budgetary constraints. According to the same logic there is also a need for a rational pavement-rehabilitation design in these regions, so as to effect both engineering and economic solutions.
The introduction of concrete block paving in Israel has provided a new series of solutions which might be suitable also for the problem described above. (see Reference 3 and Reference 4).
Limited experience has recently been gained in this respect, in a rehabilitation solution which has been applied to a major junction in the city of Beit She'an, located in the Northern Jordan Valley.
The objective of this paper is, thus, to describe the above rehabilitation solution using the block concrete paving method and its performance relative to existing flexible pavements laid on collapsible silty clay subgrade.

4. The Rehabilitation Solution

As stated above, a rehabilitation solution has been applied to a major junction in the city of Beth She'an in the Northern Jordan Valley. This junction is located in proximity to a number of archeological sites such as a Roman theatre (see Figure 1.) and its Byzantine access road made out of interlocked flagstones (see Figure 2.). The badly damaged junction, due to the moisture variations in the subgrade, was treated in the past by applying several asphaltic concrete overlays of accumulated thicknesses of approximately 20cm. This conventional solution failed very rapidly, mainly because of the high collapsible potential inherent in the local soils.
Some of these failures still exist at the approaches to the rehabilitated junction and are shown in Figure 3. As shown in Figure 4, severe rutting associated with dense cracks appeared even in the recently rehabilitated section of the approach zone. This section is made up of a 5cm asphaltic layer constructed at the same time as the concrete blocks.
In contrast to the above solution, a new solution using concrete block paving of 8cm Uni-type laid in a herringbone pattern, performed successfully. These blocks were laid after removing about 20cm of the existing pavement, using a new thin subbase course and a 3cm sand course, (see Figures 5 6 and 7).



Figure 1. The Roman Theater of Beth She'ar (200 A.D.)



Figure 2. View of Byzantine access roa constructed of interlocke stones.



Figure 3. Failure of asphalt road (dense rutting and cracking) at the access way to the junction.



Figure 4. Cracking of rehabilitated asphalt surface at the access way to the junction.



Figure 5. View of the rehabilitate junction with interlockin blocks.

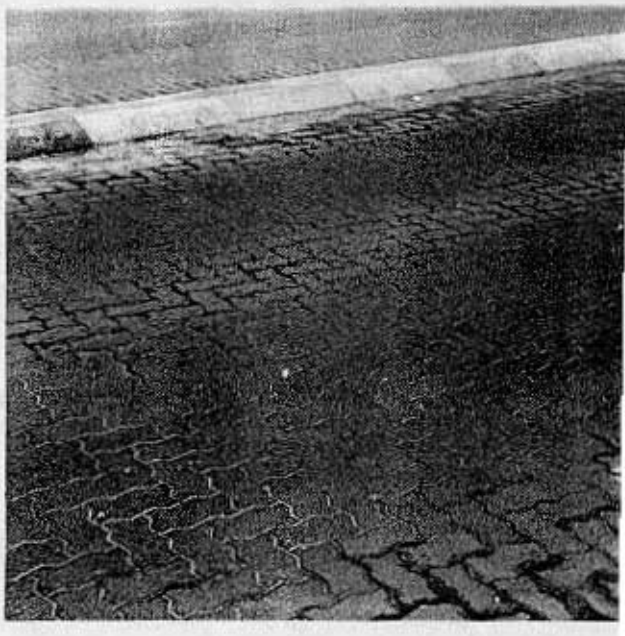

Figure 6. Close-up photograph of interloc ing blocks.



Figure 7. Close-up photograph of a successful joint solution between interlocking blocks and the existing asphalt surface.

A description of the subgrade (CL) is produced in Table 1.

LL	PL	PI	SL	F.S.	Percentage of		
		%	%	%	Sand	Silt	Clay
36	22	14	19	30	25	36	39

Table 1. Indicative properties of the subgrade.

It is also worthwhile mentioning that some building foundations collapse failures occurred in the vicinity.

5. Tentative Mechanism

As stated before, the performance until now of the concrete block pavement in the rehabilitated junction indicates the possible use of this solution for other roads based on expansive or collapsible soils. For this reason, there is good sense in examining the reasons for this success by proposing a tentative mechanism. The full mechanism must be, of course, determined by means of more extended site and laboratory testing, and by means of comparisons with similar solutions in other sites.

According to Refrences 5, 6, and 7, the concrete block layer is represented by a set of indeformable RIGID BODY elements, representing the concrete blocks which connected to each other with a set of li springs which act only in a vert direction, (see Figure 8). These spr represent the joints. The rigid bodies supported by a set of springs acting i vertical direction and representing bedding sand layer. The joint stiffness characterized by means of the magnitude K the bedding layer stiffness by means of t constant C.

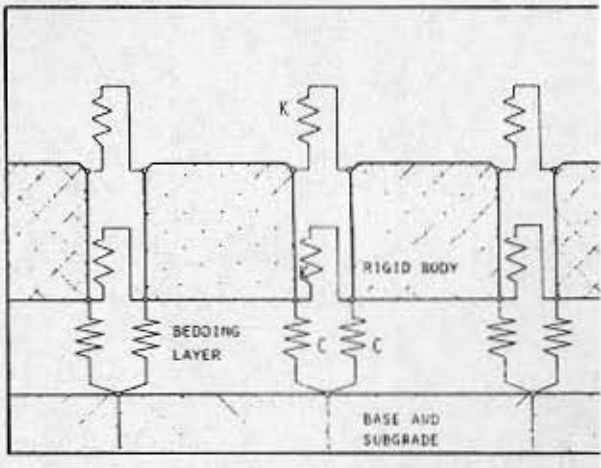

Figure 8. Modelling the concrete bl pavement, (after Reference 6)

The base and subgrade are characterized means of the elastic modulus and Poisson ratio. For these layers CSTG elements used. Furthermore, it was assumed that concrete block layer acts more or less lik pure shear layer, which means that no bend moments are transmitted in the block la and that only vertical displacements of blocks will occur. This assumption is ba on the fact that the deflection profile such a shear layer is very much like that a concrete block pavement. Also, the bedd sand layer was assumed to be incapable transmitting bending moments,(see Figure 9

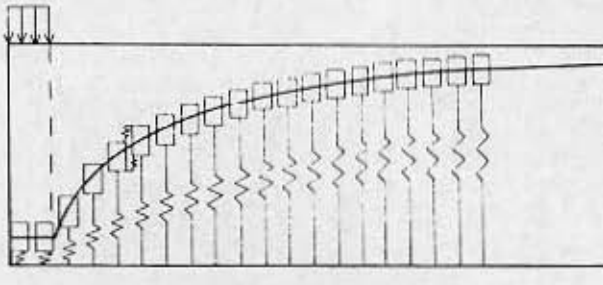

Figure 9. Concrete block layer as a sim supported pure shear layer, (af Reference 6)

In order to examine the effectiveness of concrete blocks for pavements on expansive collapsible soils, the top layer of t pavement is examined along the lines of model given above. However, here, for reas of simplicity, the sand bedding, the granu layer and the subgrade are simulated by u

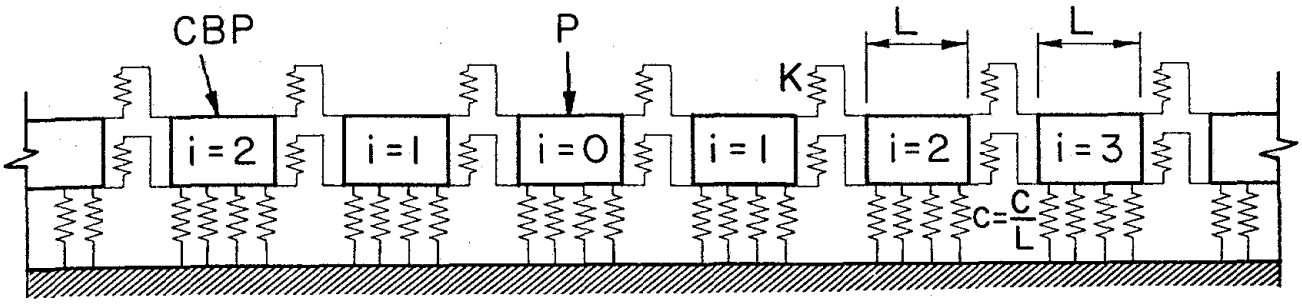

Figure 10. The static scheme of the beam constructed of interlocking blocks.

elastic springs. This is shown in Figure 10 where c is the modulus of the composite granular- subgrade reaction and K is the linear spring factor of the joints.
The deflection of the beam is given by the following expressions:

$$\delta_i = \frac{\alpha P}{c \times L} \qquad (1)$$

$$c = \frac{C}{L} \qquad (2)$$

where,

L is the length of the block. c is the linear spring factor for a unit area when the width of the block is one.
The α function for different values of C/K and different values of i (serial number of the blocks) is given in Figure 11. It has been derived from the equilibrium equations by solving the linear matrix with the aid of a PC.
when K is equal to infinity (a very rigid joint) δ_i equals zero. In other words, the whole beam is considered to be a continuous rigid beam. On the other hand, when K is equal to zero (a very loose joint), δ_o equals P/cxL. In other words, in this case, there is no transfer of load from the inner part of the beam to the other blocks.
These values of δ_i demonstrate the important role of the joints in concrete block pavements. For high values of K, the bearing capacity of the structure increases by a better load distribution capacity of the concrete block layer, as expressed by a flatter deflection bowl. This increase in the bearing capacity is one of the main reasons for the good performance of the rehabilitation solution at the junction under consideration.

Whereas to the maximum elastic deformation, a comparison between the concrete blocks pavement and the asphaltic pavement is made with the aid of the results given in Reference 6.
These results consist of the elastic deformation in various structures of the concrete blocks pavements for various measured values of K/c as given in Table 2. Added to this table are the calculated respective values for an asphaltic pavement having same structure but covered with 5 or 10 $cm_2$of asphaltic layer with E equal to 5000 kg/cm^2.
These values were calculated according to the following equations:

$$\delta_o = \sum_{\substack{i=1 \\ z=(he)_i \\ E=E_i}}^{n} [\delta_i] - \sum_{\substack{i=1 \\ z=(he)_i+h_i \\ E=E_i}}^{n-1} [\delta_{i+1}] \qquad (3)$$

$$(\delta_i)_z = \frac{(1+\mu_i)}{E_i} \times \frac{P}{\pi \cdot a} \left[\frac{1}{C} + (1-2\mu_i)(c - \frac{Z}{a})\right] \qquad (4)$$

$$C = \left[1 + (\frac{Z}{a})^2\right]^{1/2} \qquad (5)$$

$$(he)_m = f_{(m-1)} \sum_{i=1}^{m-1} \left[hi \times (\frac{E_i}{E_m})^{1/3} \right] \qquad (6)$$

$$m = i+1 \ldots n(2 \ldots n); (he)_1 = 0 \qquad (7)$$

where,

i is the layer number. For 4 layered structure, the i value for the subgrade is 4 and the i value for the asphaltic layer is 1.
n is number of layers equal to i max. (In the above example n=4).
f is a factor which usually equals 1.0 for the first interface and 0.8 for all other interfaces. For a two layered system 0.9 is often used. These equations are according to Odemark Ullidtz as formulated in Reference 9.
Table 2 shows the results of these calculations, for a=15cm P=5000 kg, and μ_i=0.5.
It can be seen from this table that δ associated with concrete block paving are

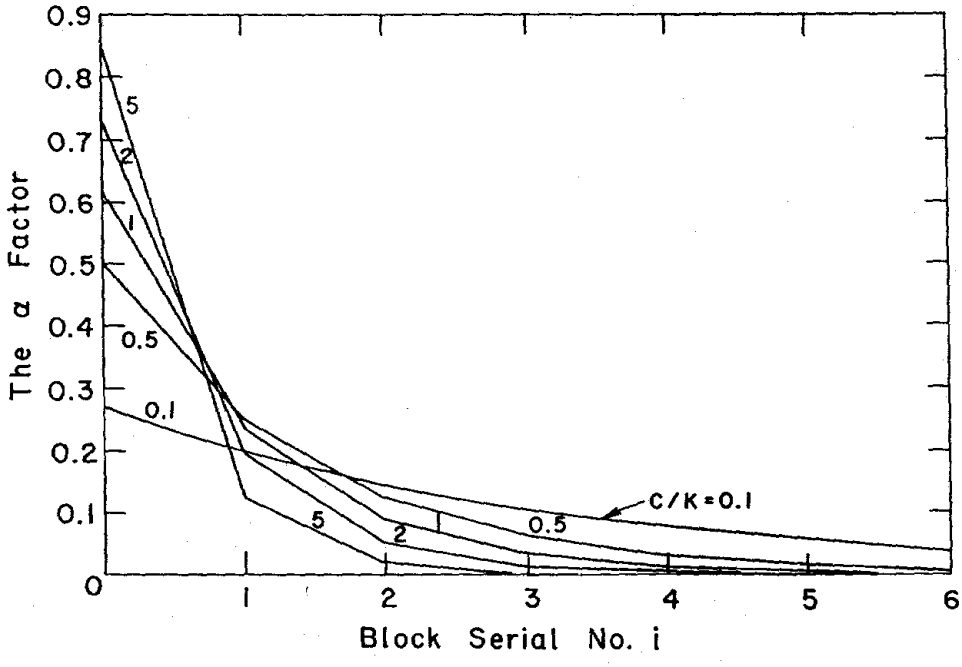

Figure 11. Change of α factor with the proportion C/K and the serial number of the interlocking blocks.

Table 2. Elastic deformation calculation for concrete block pavements and asphalt pavements

Subgrade	Subbase		Base		K/c		δ_o in CBP [mm]		δ_o in AC [mm]	
E[MPa]	h[m]	E[MPa]	h[m]	E[MPa]	low	high	K/c low	K/c high	ha=5cm	ha=10cm
50	0.50	120	0.15	240	8.5/0.065	11.5/0.08	1.055	0.918	1.301	1.137
50	0.50	120	0.15	800	13.5/0.085	16.0/0.095	0.861	0.804	0.957	0.874
50	0.50	120	0.30	350	14.0/0.085	16.5/0.10	0.836	0.769	0.945	0.867
50	0.50	120	0.30	800	18.5/0.10	22.0/0.12	0.735	0.675	0.691	0.665
50	0.50	120	0.		4.5/0.045	8.5/0.065	1.458	1.100	1.600	1.324
50	1.00	120	0.15	240	10.0/0.07	12.5/0.085	0.964	0.861	1.190	1.044
50	1.00	120	0.15	800	14.5/0.09	17.0/0.10	0.810	0.760	0.867	0.798
50	1.00	120	0.30	350	14.5/0.09	17.0/0.10	0.799	0.749	0.878	0.809
120	1.00	120	0.30	800	19.0/0.105	22.5/0.125	0.708	0.653	0.637	0.618
120	1.00	120	0.		6.0/0.055	10.0/0.070	1.219	0.998	1.412	1.169
120	0.		0.15	240	10.0/0.07	12.5/0.085	0.776	0.674	1.003	0.870
120	0.		0.15	800	14.5/0.09	17.0/0.10	0.625	0.576	0.694	0.636
120	0.		0.30	350	14.5/0.09	17.0/0.10	0.621	0.572	0.724	0.664
120	0.		0.30	800	19.0/0.105	22.5/0.125	0.533	0.479	0.498	0.486

Note: K is given in N/mm and c is given in N/mm^3

smaller by about 20% than those associated with asphalt paving. Moreover, the plastic deformation is reduced more significantly in the light of the following equation.

$$\delta_p = \delta_o \times a \times W^b \qquad (8)$$

where,

δ_p is the maximum plastic deformation.
δ_o is the maximum elastic deformation.
a and b are the structure coefficients.
According to Reference 6, a=2 and b=0.25 for concrete block pavements. According to Reference 8, a=4.5 and b=0.25 for asphaltic pavements. Thus, altogether, the ratio between δ_p associated with concrete block paving and δ_p associated with asphalt paving may be as low as 0.4.

Finally, it may summarized that the above tentative mechanism may explain the preference of concrete blocks in reducing bearing capacity and roughness failures.

6. Summary and Conclusions

Damage caused to pavements on active clays or collapsible soils appears in four major forms: (a) The appearance of unevenness along a significant length of the road surface without any cracking, or visible damage; (b) Longitudinal cracking, parallel to the road centerline; (c) Significant localized cracking; (d) Localized failure of the pavement, associated with disintegration of the road surface.

As a result of the above, beside the need for a rational pavement design in regions of expansive clay or collapsible silts, there is a need in these regions for a rational pavement-rehabilitation design which will result in both engineering and economic solutions.

In this paper, a rehabilitation solution which has been applied to a major junction in the Northern Jordan Valley is evaluated. The badly damaged junction, due to the moisture variations of the silty clay, was treated in the past by applying several asphaltic concrete overlays of an accumulated thicknesses of approximately 20 cm. These conventional solutions failed very rapidly. In contrast, a new solution using concrete block paving of 8 cm Uni type laid in a herringbone pattern, performed successfully. These blocks were laid after removing about 20cm of the existing pavement and laying a new thin subbase course and a 3cm sand course.
The tentative mechanism of the new rehabilitation solution is fully described in the paper. This mechanism, which greatly depends on the rigidity of the joints, should be verified by additional site and laboratory tests in various other places. In Israel, similar successful solution has been applie at the International Ben-Gurion airport fo the aircraft wash area (see Figure 12). Th behavior of this apron, despite constan wetting as a result of washing the aircraft is appropriate and much better than that o the flexible asphaltic aprons adjacent to th area.

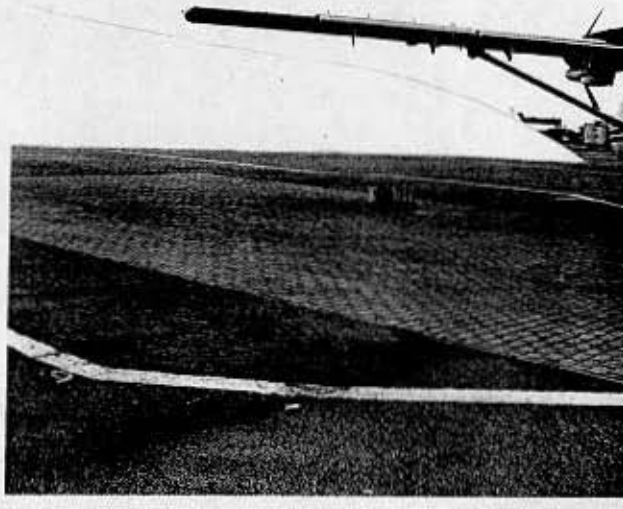

Figure 12. View of aircraft wash area.

This airport is built on expansive clays, an the expansion damages in this airfield ar not inconsequential.

Finally, it is hoped that this solution wil be applied to other pavements where th running speed allows the introduction o concrete block paving, and more experienc will thus be gained.

References

1. Kassif, G., Livneh, M., and Wiseman, G. "Pavements on Expansive Clays" Jerusalem, Academic Press, Jerusalem Israel, 1969.

2. Livneh, M., and Ishai I., "Israel Experience with Runway Pavements o Expansive Clays". Proc. 6th Int. Conf. o Expansive Soils, New Delhi, India, 1987.

3. Ishai, I. & Livneh M. "Interlockin Concrete Block Pavement for Heav Abrasive Caterpillar Loading." Proc., 2n International Conf. on Concrete Bloc Paving, Delft, Holland, April, 1984.

4. Nesichi, S., Ishai, I. and Livneh, M. "Concrete Block Pavements in Israel State of Art". Proc. Int. Workshop o Interlocking Concrete pavements, Roya Melbourne of Technology, September 1986.

5. Houben, L,J,M, Molenaar, A, A, A, Fuchs, G, H, A, M, and Moll, H, O, "Analysis and Design of Concrete Block Pavements, Proc. 2nd Int. Conf. on Concrete Block Paving, Delft, Holland, 1984.

6. Kellersmann, G. H., Klooster, J., Bosch, G.R., Beuving, E., Molenaar, A.A.A. and Moll, H.O., "Design Method for Concrete Block Pavements", Proc, 2nd Int. Conf. on Concrete Block Paving, Delft, Holland, 1984.

7. Van der Vlist, A.A., Houben L., J., M., Dekkers H., J., Duivenvourden, J. J., van der Klooster, K., van der Kreeft, S.C., and Leewis, M., "Behaviour of Two Concrete Block Test Pavements on a Poor Subgrade", Proc. 2nd Int. Conf. on Concrete Block Paving", Delft, Holland, 1981.

8. Verstraeten, J., Veverka, V., and Francken, L., "Rational and Practical Designs of Asphalt Pavements to Avoid Cracking and Rutting". Proc. 5th Int. Conf. on the Standard Design of Asphalt Pavements, Delft, Holland, 1982.

9. Wiseman, G., and Greenstein, J., "Comparison of Methods of Determining Pavement Parameters for Deflection Bowls Measurements", Proc. 7th Asian Regional Conf., Haifa, Israel, 1983.

10. Livneh, M. and Greenstein, J. "The Use of Index Properties in the Design of Pavements of Loess and Silty Clays." Proc. of the 9th ARRB Conf., Australia, 1978, pp. 237-246.

11. Livneh, M. and Ishai, I. "In Situ Strength Tests vs. Design Parameters for Pavements on Silty Subgrades." Proc., 7th Asian Regional conf. on Soil Mechanics & Foundation Engineering, Haifa, Israel, August, 1983.