THE EVOLUTION AND APPLICATION OF MECHANISTIC DESIGN PROCEDURES FOR CONCRETE BLOCK PAVEMENTS

B. Shackel

University of New South Wales, Australia

SUMMARY This paper describes the evolution of computer-based mechanistic procedures for the design of concrete block pavements for both roads and industrial hardstands. The procedures include sophisticated modelling both of the design traffic and of the properties of the pavement materials. The significance of these models is discussed and their relevance is critically assessed by reference to a series of tests of block pavements conducted by the author from 1978 onwards. These tests included both accelerated trafficking trials of a wide range of prototype pavements and FWD studies of pavements currently in service in Australia. The paper concludes with a description of the application of the design procedures to a range of segmental pavements around the world.

1. INTRODUCTION

Much of the early experience in the application of concrete block paving was gained in Europe. Here traditionally such pavements have been designed on the basis of local experience. Usually this has been disseminated as simple design catalogues (eg. 1). These present the designer with only a very limited choice of pavement materials and thicknesses and, moreover, are usually restricted to road traffic only. Such an approach can work well where, as in Europe, the range of soil types, climates and materials are relatively limited and well understood. However, once block paving began to spread beyond Europe to the Americas, Africa, Australia and Asia the limitations of the traditional European design methodology became increasingly apparent. Not only were climatic and soil conditions vastly different from those ruling in Europe but local pavement materials were often different and far more diverse. For these reasons much of the research into concrete block paving conducted outside Europe has been directed towards evolving and evaluating universal design methods for both roads and industrial hardstands.

The requirement for a universal design procedure for block paving may be summarised as follows:

a) The method must be capable of modelling a wide range of soil conditions and climates.

b) The method must effectively utilise a full range of pavement materials including both bound (stabilised) and unbound materials whether these materials are used singly or in combination with one another.

c) The method must be capable of responding to a range of traffic conditions, and must accurately model local traffic distributions, and

d) The method must be capable of handling the very wide range of vehicle loads and configurations that are characteristic of industrial pavements.

The purpose of this paper is to describe the evolution, in Australia, of a design methodology that seeks to achieve the above objectives. This method builds on the results of a series of more than 150 accelerated trafficking tests of full-scale block pavements conducted by the author since 1978.

2. EVOLUTION OF THE DESIGN PROCEDURE

The first Australian design method for block pavements was published in 1976 (2). Like most methods then available in Europe this represented an *ad hoc* procedure which failed to recognise the unique engineering features of concrete block paving. In 1978, following accelerated trafficking tests at the University of New South Wales this procedure was replaced by an empirically-based method (3,4,5).

The empirically-based design procedure was shown to be conservative when compared to earlier methods (6). Nevertheless two criticisms could be directed at the procedure. First, the design philosophy assumed *a-priori* that the quality of materials and standards of construction achieved in practice would, at least, equal those attained during the accelerated trafficking tests used to derive the design methodology. However, experience showed this was not always the case in Australia. Secondly, the method had only been experimentally verified down to CBR values of 15% (7). Despite these limitations the design method was widely used both in Australia and overseas with more than 10 000 copies being distributed worldwide.

Although the empirical design method worked well for roads it was limited to the use of high-quality crushed rock basecourses and was not suited to the design of heavily loaded industrial pavements. For these reasons the Concrete Masonry Association of Australia sponsored a computer-based mechanistic design procedure for concrete block pavements which replaces the earlier empirical procedures. This procedure has far greater flexibility in the choice of pavement materials than the earlier method. In particular, it facilitates the use of cement-stabilised base and subbase layers which have been demonstrated to offer a number of performance advantages in block pavements (7,8,9). Moreover, the method permits accurate modelling of the loading conditions for both roads and industrial hardstands.

The first step in the development of a mechanistic design procedure is to choose an approp-

riate analysis procedure. Three main approaches to the analysis of block pavements have been described. Ranked in order of their development these comprise:

Modified rigid pavement analyses (10,11).
Layered elastic system analyses (12,13).
Finite element analyses (14,15).

In the case of rigid pavement or slab analyses workers at both the Portland Cement Institute, Johannesburg (10) and at CERIB in France (11) have sought to characterise the structural performance of block pavements by modifying conventional slab theory. Here the properties of the block concrete have been determined by means of plate load tests. The principal limitation of this type of analysis is that it cannot model the effects of base or sub-base layers. Rather, the analyses required the entire substructure beneath the blocks to be characterised in terms of some equivalent semi-definite half-space. Despite this limitation, the work at the PCI, South Africa, has shown that it is possible to derive useful design information from modification of slab theory (10).

A more conventional and widely used approach is to use layered elastic theory to analyse the block pavement. Such procedures are already well established for conventional flexible pavement design. For example, the National Association of Australian State Road Authorities now recommend a hierarchy of computer-based elastic analyses for the design of road pavements in Australia (16). Here a pavement is modelled as a succession of layers each having linear elastic properties. The stresses and strains throughout the pavement may then be calculated as functions of the load magnitudes and placement and the layer thicknesses and properties.

The use of both slab and elastic layer theory ignores the discrete discontinuous nature of paving blocks but, rather, presupposes that the block course can be modelled in terms of an equivalent continuous elastic layer whose properties can be determined by plate load tests, accelerated trafficking studies or Falling Weight Deflectometer measurements. An alternative to this is to use finite element techniques to model the blocks as an articulated surfacing having defined load or displacement transference characteristics at the joints between neighbouring paving units.

Finite element studies of block paving have been reported both in Japan (14) and the Netherlands (15,17,19). The Japanese study was restricted to a consideration of the block surfacing. The Dutch study was more comprehensive in that the analysis included an assessment of a complete block/base/sub-base/subgrade system.

In choosing among the three alternative analyses described above the use of slab theory was rejected because of the difficulty of properly modelling the base and sub-base courses. Of the remaining procedures, the finite element method, although shown to be capable of closely modelling the observed load/deflection behaviour of block pavements (19), is more suited as a research tool than for routine design. In particular the method is slow and requires expert adjustment of the model to account for any change in the properties or sequence of the pavement layers. By contrast, a wide range of elastic layer analyses are already in common use for pavement design (eg. 16). These analyses may be quickly and easily varied to model a wide range of pavement types even by technically-naive users.

For the reasons outlined above it was decided to adopt elastic layer theory as the basis for the design method described here. It is important to note that it is not claimed that concrete block pavements perform elastically *per se*. Rather, the performance of the actual pavement is modelled in terms of an equivalent elastic system whose properties vary with time and traffic. This is of some importance because current routine pavement evaluation techniques such as the Falling Weight Deflectometer (FWD) can be used to measure the equivalent elastic properties of real pavements and, thereby, provide the necessary input to the design analysis.

3. THE DESIGN METHODOLOGY

The mechanistic design procedure has been described in detail elsewhere (13,20,21) and only a summary of the method is given here. The procedure implements the following steps:

a) The loads carried by the pavement are expressed in terms of a spectrum of design axle loadings. For roads the distributions of axle types and loads are commonly available from loadometer studies of public highways. For industrial pavements the spectrum can be assembled from data on each type of vehicle to be accepted by the pavement together with data on the distributions of container sizes, weights etc.

b) The base and sub-base layers are specified as being either unbound or stabilised materials.

c) The subgrade is characterised by a modulus value which is commonly inferred from CBR or other simple soil test data.

d) The block thickness and modulus is specified. In general the modulus depends on the block shape and laying pattern. Accelerated trafficking studies (6,8) have shown that, provided dentated blocks are used, a block thickness of 80mm can be chosen for most trafficked pavements irrespective of the loads to be carried provided the pavement is laid in herringbone bond.

e) The program selects trial thicknesses (>100mm) of the base or sub-base.

f) For each of the axles in the loading spectrum the distribution of stresses and strains are computed. Here an elastic analysis capable of implementation on 16 or 32-bit microcomputers has been developed and verified. Full details of the procedure have been published elsewhere (22). Where the analysis involves unbound granular materials the base or sub-base layers are automatically subdivided into

three thinner layers which are assigned values of moduli which depend on the stiffness of the underlying layers. In this manner materials are treated as being stress dependent (non-linear).

g) Having computed the distribution of stress and strain, the number of repetitions of those stress and strain magnitudes that the pavement can withstand prior to failure are calculated in accordance with failure/damage criteria based on Miner's linear cumulative damage hypothesis (20). In the case of unbound granular base or sub-base materials the vertical compressive strain at the top of the subgrade is selected as the performance attribute. This is then compared with the widely used Shell criterion for the control of rutting in flexible pavements (23,24) to determine whether or not the pavement will perform adequately under the design traffic. In the case of bound base or sub-base the fatigue criteria developed by the Portland Cement Association (25) are used to assess whether the pavement can carry the design traffic without fatigue cracking of the layers.

h) Steps (f) and (g) are then repeated for the remaining design axles and the cumulative damage is calculated. If necessary the trial thicknesses are progressively incremented (ie. steps (e), (f) and (g) are repeated) until the pavement can be shown to have sufficient capacity to withstand the entire planned spectrum of loading. Where both a base and sub-base is to be designed the program first assumes a value of the support to be provided by the sub-base and determines an appropriate base thickness. The corresponding sub-base thickness is then calculated. The computer program includes a number of important refinements. For example, the program models the progressive stiffening of the blocks that has been observed in trafficking tests (6,7). This enables the effect of early construction traffic to be included as part of the design process. Furthermore the programs permit the inclusion of both construction and maintenance costs as design variables so that the relative economy of alternative types of pavement may be readily assessed.

4. IMPLEMENTATION OF THE DESIGN METHODOLOGY

The methodology described above has been developed to be as universal as possible. To implement the procedure and to make it specific to particular local conditions requires only a suitable choice of the input parameters in respect of

a) the loading conditions, and
b) the characterisation of the pavement materials.

Each of these inputs is now considered in more detail.

4.1 Loading conditions

In most developed countries the distributions of axle loads and axle types for road vehicles are available as loadometer studies conducted by state or municipal authorities. Such distributions often vary with time and locale. Usually the traffic load distributions can be adequately modelled as some 50 combinations of axle load and axle configuration. The effects of these 50 load combinations are separately assessed by the design program and their cumulative effect is predicted using Miner's law. This enables the program to adapt to local traffic conditions. This is illustrated in Figure 1 which shows design thicknesses for a concrete block pavement load on either a crushed rock base or a stabilised base for both Australian and North American traffic load distributions. Here the Australian traffic distributions lead to greater pavement thicknesses than the American distributions because there is a higher proportion of overloaded vehicles in the Australian traffic data.

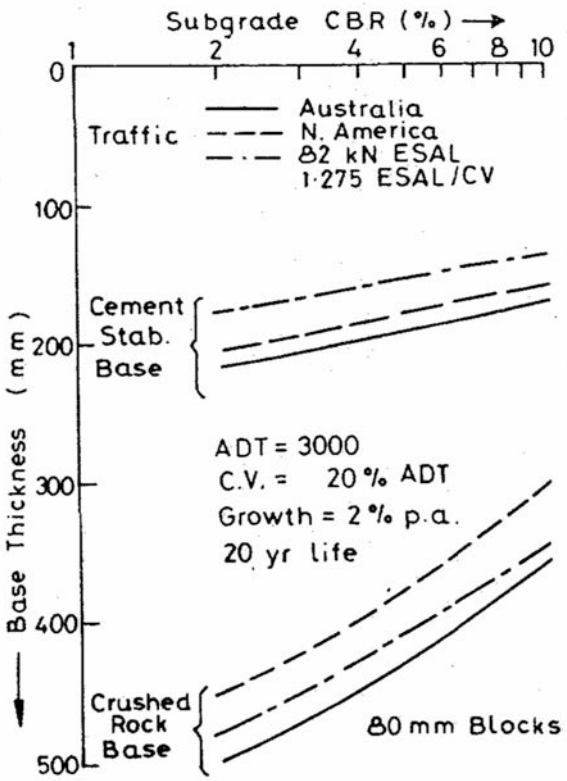

Fig. 1 Design curves for road pavements for various traffic loadings

Where loadometer data are not available it becomes necessary to use the concepts of axle load equivalency. Here the actual traffic is replaced by an equivalent number of standard axle loads (ESAL) based on a knowledge of the supposed average number of ESAL per commercial vehicle in the traffic stream. Such ESALs normally correspond to the maximum legal truck axle load and the number of ESALs is chosen so that, in theory, it will produce the same degree of pavement distress as the actual traffic that it

seeks to model. The damaging effects of a given amount of traffic varies widely depending on the pavement materials and the type of pavement (26). This makes it extremely difficult to predict accurately the effects of traffic in terms of ESALs unless comprehensive data are already available for the particular pavement type under consideration. Such data do not yet exist for concrete block pavements. Accordingly, axle load equivalencies should only be used where full loadometer data is unavailable. As shown in Figure 1 the use of ESALs to model the traffic yields different thickness from those associated with loadometer data. Similar results have been obtained for flexible pavements (17). In the case of pavements incorporating cement-treated bases the use of ESALs leads to smaller thicknesses than those associated with loadometer data because the latter incorporate overloads to which brittle stabalised materials are highly sensitive. By contrast, the use of ESALs lead to greater thicknesses of unbound base because here the thickness is relatively insensitive to overloads but rather depends on the average load level.

In the case of industrial pavements the axle loads, repetitions and configurations of each of the vehicles using the pavement are considered separately. This enables the full spectrum of load from trucks to straddle carriers, forklifts, transtainers etc to be fully modelled. Where necessary the distribution of container loads can be readily included in the analyses using data published earlier (27). Such an approach avoids the need, common hitherto, to resort to simplistic and often inappropriate concepts of axle load equivalency (eg. 12) or to employ the notion of "design vehicle" (eg. 28). The effects of changes in the loading spectrum for industrial block pavements are illustrated in Figure 2 for a vehicle handling containers, From this figure it may be seen that to design the pavement on the assumption that the vehicle always runs at its full rated load capacity leads to the choice of substantially greater thicknesses than where a more realistic load distribution is used that reflects the variations in container weight normally encountered in practice.

4.2 Materials characterisation

The design methodology requires each of the pavement materials to be characterised in terms of a modulus, E, and Poisson's Ratio, ν. The concrete block course may be characterised in terms of an equivalent elastic layer that effectively replaces the blocks and bedding sand. Here values of the equivalent modulus, E, can be obtained from plate load tests of blocks tested without support (eg. see Ref. 10 - similar tests are currently in progress at the University of New South Wales), from the analysis of pressure cell and multi-depth deflectometer data in experimental pavements (6,8,29) and from FWD studies of actual concrete block pavements currently in service. Typical results obtained by the author for dentated blocks are

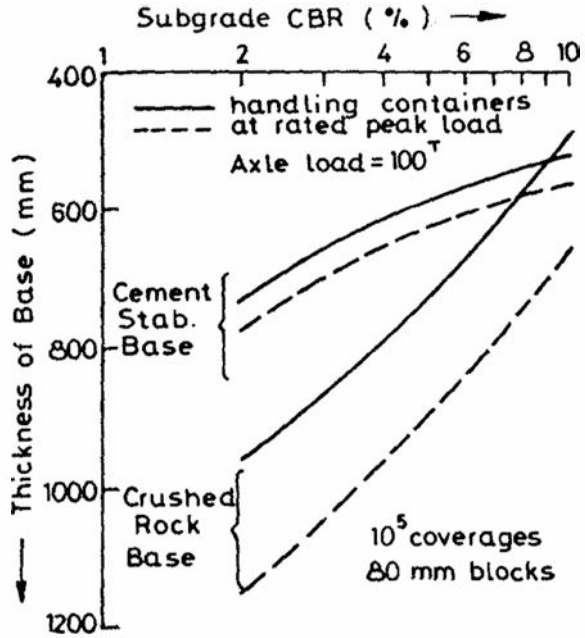

Fig. 2 Typical design curves for industrial pavements

given in Table 1. These are compared with data for rectangular pavers obtained in the Netherlands (30).

TABLE 1 Typical Moduli for Concrete Blocks

Method of Test	Block-Moduli (MPa)
Load tests of pavement	2800-3400
FWD:	
Dentated	1570-12495 (Mean 3400)
Rectangular (After Ref. 30)	500-7000 (Mean 2975)

Accelerated trafficking tests (6,7,8,9,29) have shown that block pavements progressively stiffen under traffic. This stiffening process takes up to 10 000 wheel passes. To model this effect the design program assumes conservatively that immediately after construction, the block layer is equal in modulus to the basecourse and that it builds up to the full value of modulus (eg. as given in Table 1) during the first 10 000 axle load repetitions.

For base and sub-base materials the parameters E and ν can be obtained from laboratory tests or from FWD field data. Alternatively typical values such as those given in Table 2 may be used.

5. ADVANTAGES OF A COMPUTER-BASED METHODOLOGY

The mechanistic procedure offers the following advantages:

a) The method permits rigorous modelling of the loading conditions and the materials characteristics.

b) It is feasible to consider a wider range of material combinations than is possible by using manual procedures. This aids the designer to achieve a more cost-effective solution than where he is restricted to con-

TABLE 2 Characteristics of pavement materials for elastic layer modelling

Material	Modulus, E (MPa) Range	Recommend	Poisson's Ratio(ν) Range	Recommend
Base:				
crushed rock	200-800	350	0.10-0.50	0.35
stabilised	1000-30000	2300	0.10-0.50	0.35
Sub-base:				
gravel	150-450	225	0.10-0.50	0.35
stabilised	5000-7000	1500	0.10-0.50	0.35

sideration of just one type of pavement or a single type of material as is the case with most design procedures published to date. The choices available to the designer are illustrated in Figure 3 and a typical selection of alternative industrial pavement designs is shown in Figure 4.

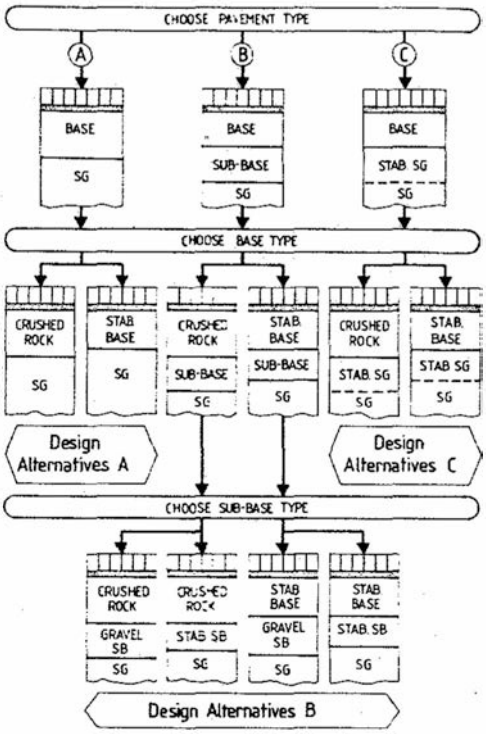

Fig. 3 Pavement design alternatives

c) The methods are systematic and lead the user through a design procedure which ensures that all essential requirements are considered.

d) The methods focus on essentials. By isolating the engineer from the minutiae of complex calculations he is able to concentrate on optimising his design.

6. VERIFICATION AND APPLICATION OF THE METHOD

As the methodology has evolved it has been used in the design of many major block pavements around the world including those at the Massey Coal Terminal, Newport News, Va. (31) and the Canadian Pacific International Container Facility, Edmonton. By late 1987 the method was known to have been used for the design of more than 500 000m^2 of industrial pavements alone. Applications currently in service include con-

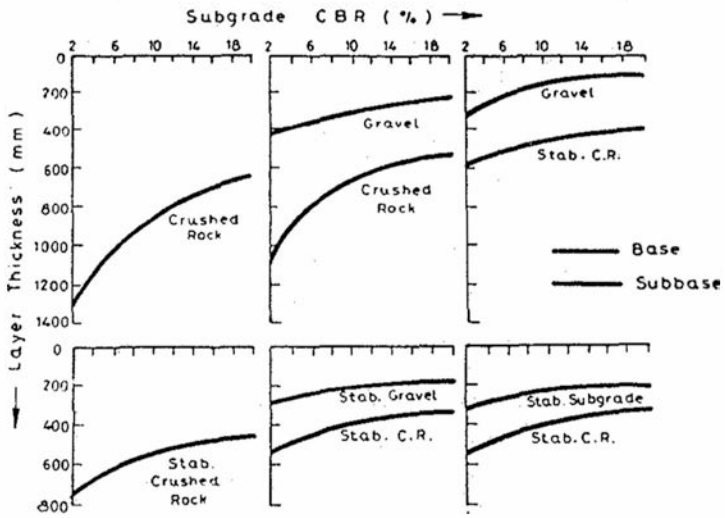

Fig. 4 Typical alternative pavement designs as a function of subgrade CBR

tainer yards, port facilities, bus terminii and a wide range of road pavements.
Wherever possible the design method described herein has been compared with the results of alternative design procedures. Comparisons of the pavement thicknesses calculated by the mechanistic procedure are shown in Figure 5 compared to those thicknesses known to be performing satisfactorily in-service. From this figure it may be seen that, in general, the computer-based procedure appears to be conservative.

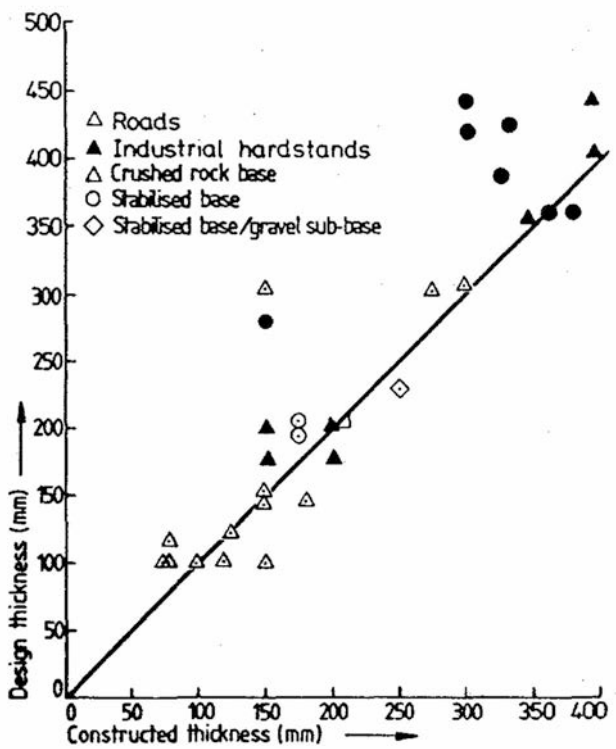

Fig. 5 Comparison of thickness indicated by design program with those found adequate in practice

7. CONCLUSION

The emergence of mechanistic design procedures provide engineers with powerful tools for studying a wide range of practical pavement engineering problems. An advantage of such methods is that they accurately model complex loading conditions. Moreover, the methods allow the designer to study a wide range of materials used either singly or in combination with other materials. This facilitates the achievement of an optimal and economic design. For this reason mechanistic design procedures are likely to be used increasingly in the design of block pavements in the future.

8. REFERENCES

1. Forschungsgesellschaft fur Strassen - und Verkehrswesen. Richtlinien fur die Stadardisierung des Oberbanes von Verkehrsfläschen. RS60 86 1986.
2. Cruickshank, J.W., Interim Guide to the Design and Construction of Interlocking Sett Pavements, Cement and Concrete Association of Australia, Technical Note TN32, 1976.
3. Shackel, B., The Design of Interlocking Concrete Block Pavements, Australian Road Research Board, Research Report ARR 90, 1979, pp 53-70.
4. Hodgkinson, J.R. and Morrish, C.F., Design of Interlocking Concrete Pavements for Road Traffic, Cement and Concrete Association of Australia, Technical Note TN40, 1982.
5. Shackel, B., The Design of Interlocking Concrete Block Pavements for Road Traffic, Proc. 1st Int. Conf. on Conc. Block Pavings. Newcastle-Upon-Tyne. 1980.
6. Shackel, B., A Study of the Performance of Block Paving under Traffic using a Heavy Vehicle Simulator. Proc. Aust. Road Res. Board Vol 10, Pt 2, 1980, pp 19-30.
7. Shackel, B., An Experimental Investigation of Factors Influencing the Design of Interlocking Concrete Block Pavements for Roads. Proc. Australian Road Research Board, Vol 11, Pt 2, 1982, pp 6-15.
8. Shackel, B., Loading and Accelerated Trafficking Tests on Three Prototype Heavy-Duty Industrial Block Pavements. NITRR, CSIR Tech. Rpt. RP12/80. 1980.
9. Shackel, B., Accelerated Trafficking Trials of Machine-Layable Concrete Block Paving. Aust. Road Res. Vol 17 No 1, March 1987, pp 13-27.
10. Marais, L.R., Investigation into the Load Bearing Capacity of SF Concrete Roadstones, Portland Cement Institute, Johannesburg, 1967.
11. Dutruel, F. and Dardare, J., Etude du comportement Structurel des Chaussees Revetnes par des Paves en Beton. CERIB Tech. Publ. 91, March 1987, 38 pp.
12. Barber, S.D. and Knapton, J., Structural Design of Block Pavements for Ports. Proc. First Int. Conf. on Conc. Block Paving, Newcastle, 1980.
13. Shackel, B., Progress in the Evaluation and Design of Interlocking Concrete Block Pavements. Paper presented at the Biennial Conf. of CMAA, Brisbane, March 1980.
14. Nishizawa, T., Matsuno, S. and Komura, M., Analysis of Interlocking Block Pavements by Finite Element Method. Proc. Second Int. Conf. on Conc. Block Paving, Delft, pp 80-85, 1984.
15. Houben, L.J.M., Molenaar, A.A.A., Fuchs, G.H.A.M. and Moll, H.O., Analysis and Design of Concrete Block Pavements. Proc. Second Int. Conf. on Concrete Block Paving, Delft. 1984.
16. National Assn. of Australian State Road Authorities. A Guide to the Structural Design of Road Pavements 1987.
17. Shackel, B., Mechanistic Procedures for the Design of Flexible Road and Industrial Pavements. Proc. 6th Int. Asphalt Conf. Sydney 1986.
18. Kellersmann, G.H., Van der Klooster, J., Bosch, G.R., Beuving, E., Molenaar, A.A. and Moll, H.O., Design Method for Concrete Block Pavements. Proc. Second Int. Conf. on Concrete Block Paving, Delft, pp 100-114, 1984.
19. Molenaar, A.A.A., Moll, H.O. and Houben, L.J.M., Structural Model for Concrete Block Pavements. Paper submitted to Annual Meeting of Transportation Research Board, 1984.
20. Shackel, B., Computer-Aided Design and Analysis of Concrete Segmental Pavements. Proc. Int. Workshop on Interlocking Conc. Pavements. Melbourne, Sept. 1986.
21. Shackel, B., The Design and Application of Concrete Segmental Paving in Transportation. Conc. in Transportation American Conc. Inst. Sp 93. 1986.
22. Shackel, B., The Optimal Design of Road and Industrial Pavements Using Microcomputers. Proc. 4th Int. Conf. on Engg. Software, London, 1985, pp 3-35 — 3.49.
23. Claessen, A.I.M., Edwards, J.M., Sommer, P. and Uge, P., Asphalt Pavement Design — The Shell Method. Proc. Fourth Int. Conference on Structural Design of Asphalt Pavements, Ann Arbour, 1977.
24. Anon. Addendum to the Shell Pavement Design Method. Shell Int. Petroleum Co. 1985.
25. Larsen, T.J., Nussbaum, P.J. and Colley, B.E., Research on Thickness Design for Soil-Cement Pavements, PCA Dev. Dept., Bulletin D142, 1969.
26. Freeme, C.R., Meyer, R.G. and Shackel, B., A Method for Assessing the Adequacy of Road Pavement Structures Using a Heavy Vehicle Simulator. Proc. Int. Road Federation, Stockholm, 1981.
27. Barber, S.D. and Knapton, J., Port Pavement Loading, Dock and Harbour Authority, April

1979.

28. National Concrete Masonry Association, Design of Concrete Block Pavements for Heavy Industrial and Port Loads, NCMA Tek 131, 1983.

29. Shackel, B., An Experimental Investigation of the Response of Interlocking Block Pavements to Simulated Traffic Loading. Aust. Road Res. Bd. Res. Rpt ARR90. 1979.

30. Fuchs, G.H.A.M., Houben, L.J.M. and Molenaar A.A., Evaluate van bestaande betonstraatsteenvehardingen. Tekst Rpt. 7-83-200-5 Technical Univ. Delft, 1983.

31. Brunstrom, G.R., Considerations on the Choice of Concrete Block Paving at Massey Coal Terminal, Newport News, Virginia. Proc. 2nd Int. Conf. on Conc. Block Paving, Delft 1984.