DEVELOPMENT OF A THREE-DIMENSIONAL FINITE ELEMENT MODEL FOR CONCRETE BLOCK PAVEMENTS

M. Huurman, L.J.M. Houben and A.W.M. Kok
Delft University of Technology, Delft, The Netherlands

SUMMARY

To investigate the mechanical behaviour of concrete block pavement sructures two finite element models have been developed. In the first model the rectangular concrete paving blocks, laid in herringbone bond, are modelled by rigid blocks. Each of these blocks is interconnected to the neighbouring blocks by means of springs in x, y and z directions. This concrete block layer is placed on top of four layers of elastic elements, representing the bedding layer, base and sub-base. The subgrade is represented by vertical springs. This finite element model is subjected to real traffic loads.
Determination of the stresses within the concrete paving blocks requires a second model of a single, elastic concrete block which has been loaded by forces obtained from the first model.
It is shown that the properties of the concrete block layer have a minimal effect on the behaviour of the total concrete block pavement structure.

1. INTRODUCTION

Concrete block pavements are widely used in The Netherlands. For the upper layer of such pavements, concrete blocks heavier then 4.5 kg are often used. Mostly these blocks are laid down by roadpaviours, who place them into the right bond by hand.
To minimize the damage to the paviours' health, blocks lighter than 4.5 kg should be used to create the block layer (1, 2). Due to standardization in The Netherlands, lighter blocks preferably should have standard horizontal dimensions of 105 x 211 mm^2 (3). The density of concrete blocks is such that blocks thicker than 80 mm (± 4.3 kg) are to heavy.

To achieve this weight minimization goal, a good insight into the stresses occurring within the concrete block pavement structure, and especially within the concrete paving blocks is needed. A theoretical study, using the Finite Element Method (F.E.M.), is performed to provide this insight. The program system ICES STRUDL is used to elaborate two models (4). The first model is a global model of the total pavement structure, subjected to traffic loads, in which the rigid blocks are interconnected by springs, representing the joints between the blocks. In the second model one single concrete block is given a Young's modulus such that stresses within this block can be calculated; this single block is loaded by forces resulting from the global analysis with the first model.

Using these two models it should be possible to show that blocks used presently, which are often thicker than 80 mm, are to thick. This implies that thinner blocks are more economical and better in preventing damage to the paviours' health.

2. MODELLING THE CONCRETE BLOCK PAVEMENT STRUCTURE

2.1. Modelling the concrete block layer

In The Netherlands the most widely used paving bond is the herringbone bond. Therefore, this bond is modelled. The horizontal dimensions of the blocks are fixed at 105 x 211 mm^2, the standard dimensions of the most widely used type of rectangular concrete paving block in The Netherlands (3). The modelled structure is assumed to be in a perfect condition. This means that the unloaded pavement structure does not show any permanent deformation. The joints between the concrete paving blocks will be filled completely with sand. None of the blocks makes direct contact with any other block

Stresses in the joints transmit part of the forces acting from one block to adjacent blocks. In the modelled structure this transmission is taken into account by interconnecting the blocks with springs in three directions, these springs are located in the centre of the expected stresses, in such a way that the joint between one block and another is modelled by four sets of three springs (figure 1). The springs transmit a load F which is proportional to the difference d of the displacements between both sides of a joint: F - k . d, where k - spring stiffness. The spring forces are assumed to represent the resulting forces of the stresses in the joints between the blocks.
Since tensile forces can not occur in the jointing sand, springs which transmit tensile forces are disconnected.

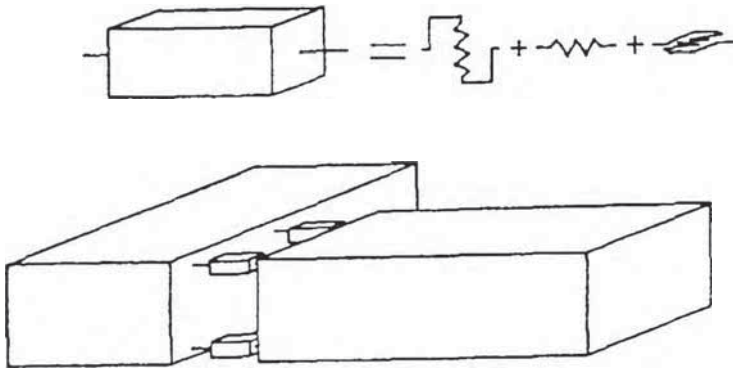

Figure 1. Modelling a joint by four sets of three linear-elastic springs.

The concrete paving blocks are modelled by rigid elements. Compared with concrete the sand in the joints between the blocks and the sand of the bedding layer beneath the blocks is a weak material. The Young's modulus of concrete, used to manufacture the paving blocks, is about 35,000 N/mm^2, while sand has a Young's modulus of about 100 to 200 N/mm^2. This rigid body assumption seems to be realistic and reduces the complexity of the model and the computer-costs considerably.

2.2. Modelling of the layers beneath the concrete blocks

The layers underneath the concrete block layer are modelled by linear-elastic three-dimensional elements. Four layers of these elements are used to model the manmade pavement substructure (bedding layer, base and sub-base).
The subgrade is represented in the conventional way by vertical linear springs.
The system, shown in figure 2, is now obtained and will be used for the global analysis.

The model of 27 concrete paving blocks contains two columns of four elastic elements under each modelled concrete block. Hence 216 elastic elements represent the manmade pavement structure, the subgrade is represented by 74 vertical springs. This model has been formed in such a way that the stress distribution is not obstructed.

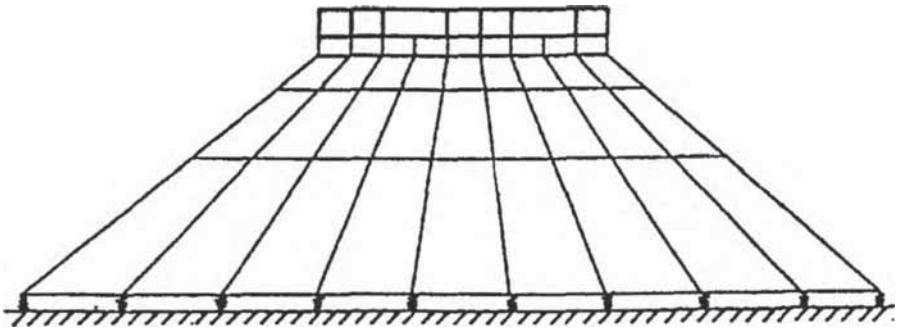

Figure 2. The modelled system; the shape of the model is necessary since the distribution of dynamic stresses may not be obstructed.

2.3. Model of a single concrete paving block

The model shown in figure 2 includes concrete paving blocks represented by rigid elements. This means that stresses occurring within the concrete blocks can not be determined. A second model is needed to compute these stresses. This model will represent one single concrete block with the real Young's modulus for concrete. This single concrete paving block is modelled by 16 elastic elements (figure 3).

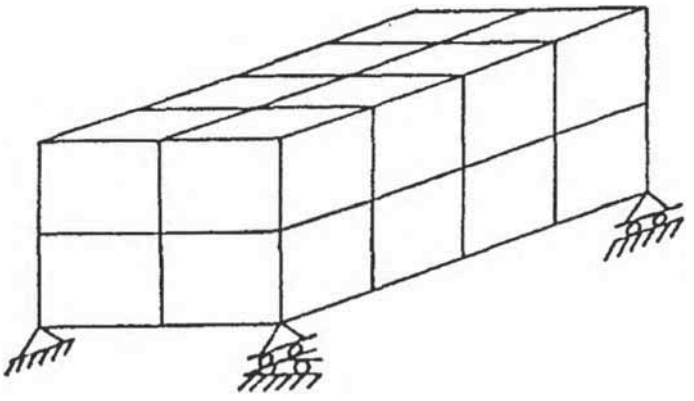

Figure 3. The model of a single concrete paving block

The load case, causing stresses within the concrete block, is obtained from the global calculation with the first model. The spring forces, as applied on the rigid blocks, are replaced by equivalent joint loads at the element nodes. These joint loads may be calculated by virtual work considerations or any other method. A very detailed computation is irrelevant because we are mainly interested in the stresses in the middle of the concrete paving block

Now two finite element models are obtained which give us the possibility to calculate the stresses and displacements within the total concrete block pavement structure, including the blocks themselves. The results of these calculations are described in the next chapter.

3. CALCULATION RESULTS

3.1. Introduction

To test the model some weak concrete block pavement structures were analyzed. It should be noted that in weak structures the highest stresses within the concrete paving blocks are expected. If thinner blocks are possible in weak structures, these blocks can be used in other structures too.
The model is tested on concrete block pavement structures on a sand/clay-subgrade. This subgrade was modelled by linear-elastic vertical springs
based upon a bedding constant of 0.034 N/mm^3.
All pavement structures contained just one layer between the concrete block layer and the subgrade. This layer was a 750 mm thick sand sub-base represented by the four layers of elastic elements, which were given a Young's modulus of 100 N/mm^2.
The concrete block layer consisted of 80 mm thick rectangular concrete paving blocks. These blocks were interconnected by shear springs with a low stiffness of 81.5 or 11.1 N/mm^2, depending on the width of the modelled joint; these values are based on earlier studies with a two-dimensional finite element model (5). The normal springs in the joints had stiffnesses based upon fully sandfilled joints (Young's modulus 100 N/mm^2). This model will be called model 80 nun-weak.
Model 80 mm-stiff had joint shear springs which were five times stiffer than the shear springs in the joints in model 80 nun-weak.
When the thickness of the modelled blocks in model 80 mm-stiff is reduced to 60 mm and the stiffnesses of the joint springs are multiplied by 60/80, model 60 mm-stiff is obtained.

These models have been loaded by a 50 kN load. This load has been uniformly distributed over a square with sides of 266 mm, which makes the contact pressure 0.707 N/mm^2. This makes it possible to compare the finite element calculations with the results of falling weight deflection measurements (5,6). In such a deflection measurement a 50 kN load is applied on a pavement by means of a circular plate, diameter 300 mm, so that the contact pressure equals 0.707 N/mm^2.

All finite element models contained 27 concrete paving blocks, as shown in figure 4. The 50 kN load is also indicated in this figure.

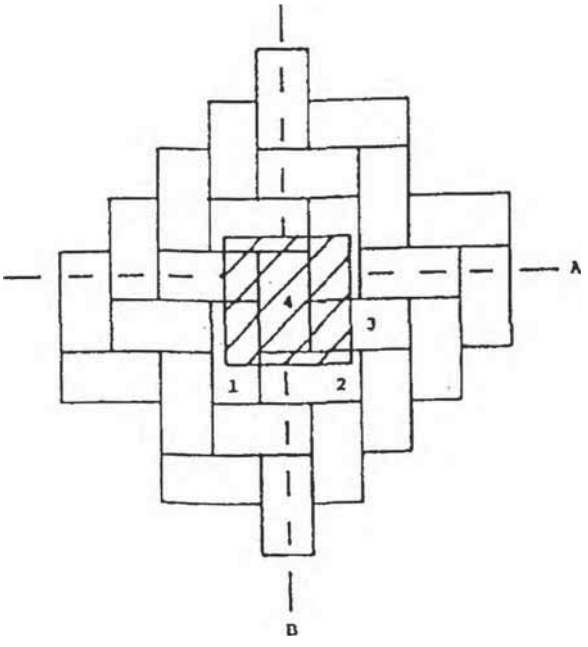

Figure 4. The block layer, consisting of 27 concrete paving blocks in herringbone bond.

3.2. Deflection curves

The calculated deflection curves of model 60 mm-stiff are shown in figure 5. Lines A and B can be found in figure 4. The maximum deflection is 1.383 mm, such maximums are also found with the other models (figure 6).

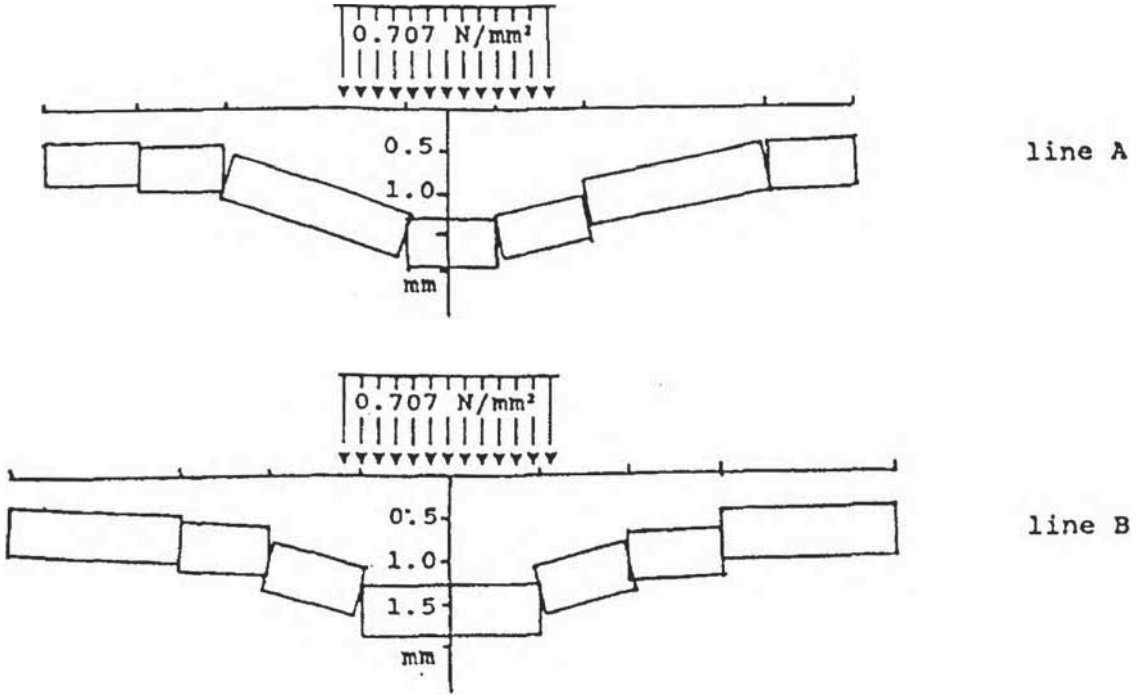

Figure 5. Deflection curves calculated by model 60 mm-stiff over lines A and B of figure 4.

	deflections (mm)			
	d0	d200	d300	d500
model 80 mm-weak	1.352	0.837	0.508	0.375
model 80 mm-stiff	1.316	0.821	0.507	0.376
model 60 mm-stiff	1.383	0.837	0.500	0.370
actual 90 mm-weak	1.295	-	0.417	0.268
actual 80 mm-weak	1.505	-	0.605	0.328

Figure 6. Deflection curves calculated by the different models and some measured deflection curves.

In figure 6, actual 90 mm-weak refers to falling weight deflection measurements on a recently built concrete block pavement structure, consisting of 90 mm thick rectangular concrete paving blocks and a 950 m thick sand sub-base over a clay/sand-subgrade.

The results of the same measurements on a concrete block pavement structure, consisting of 80 mm rectangular concrete paving blocks and a 1050 mm sand sub-base over a silty sand subgrade are indicated by actual 80 mm-weak.

The differences between these two measured deflection curves and the calculated curves are small. The calculated deflection curves can be seen as an average curve of the two measured curves.

The small differences between the various calculations indicate that the properties of the block layer hardly effect the behaviour of the total concrete block pavement structure.

3.3. Stresses in the sand sub-base

The calculated dynamic vertical stresses in the sand sub-base are shown in figure 7. The effects of stress distribution are clearly shown in this figure.

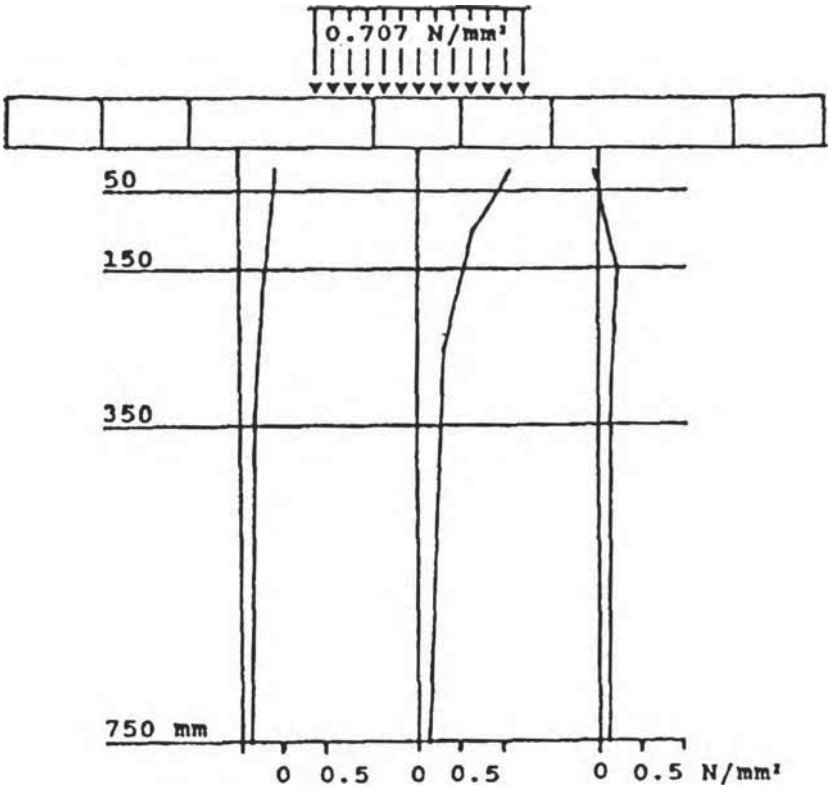

Figure 7. The vertical stresses obtained by model 60 mm-stiff.

Horizontal distribution of the vertical dynamic stresses at several depth is shown in figure 8. The stresses immediately under the blocks are as expected. It is clear that the highest vertical stresses appear directly under the edges of the very stiff paving blocks.

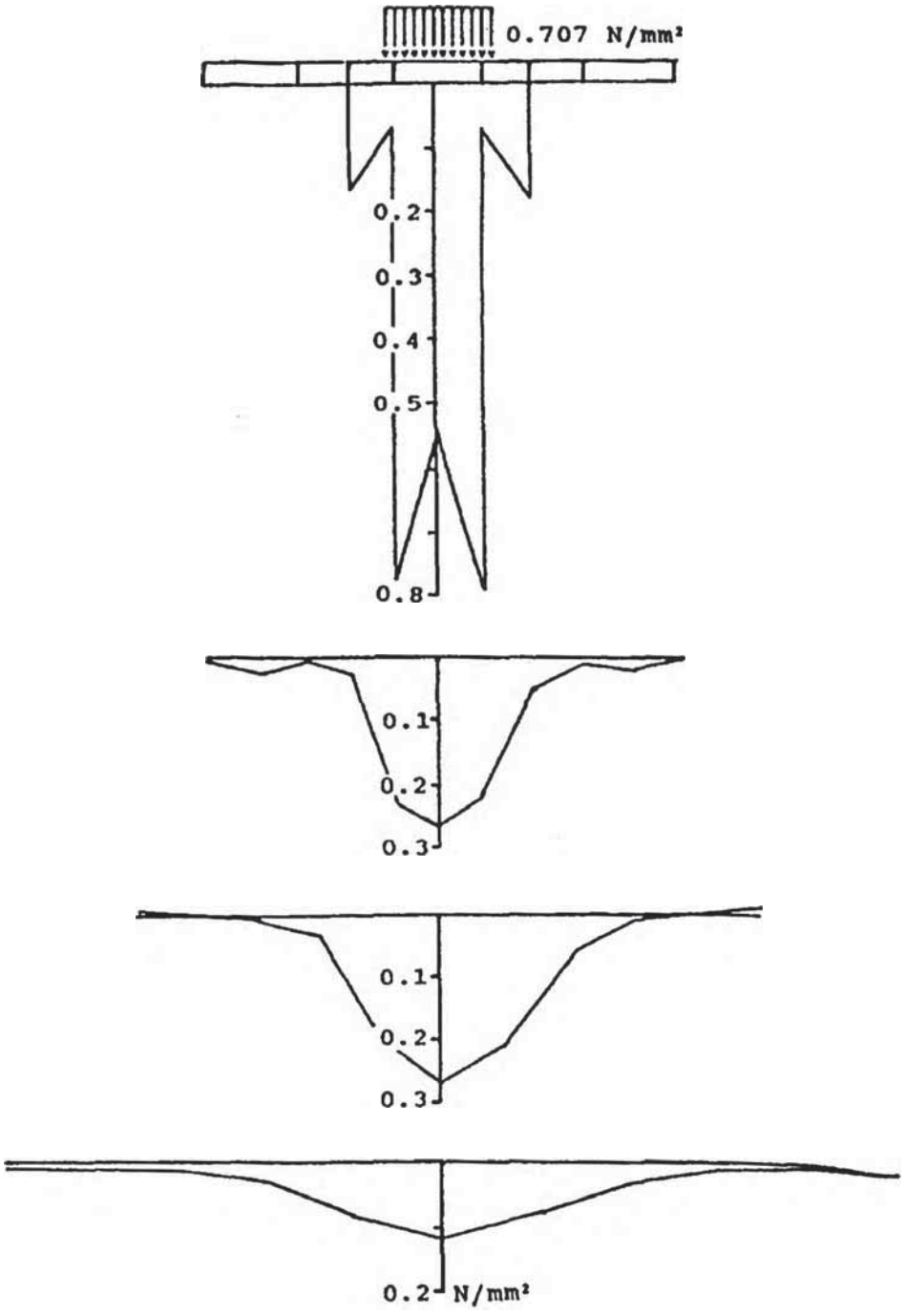

Figure 8. The horizontal distribution of the vertical dynamic stresses (over line B of figure 4) in model 60 mm-stiff at a depth of 25, 50, 150 and 350 mm.

3.4. Stresses in the concrete paving blocks

The stresses in the four concrete paving blocks indicated in figure 4 were computed for all models. In all cases the block in the centre of the load was the one in which the highest tensile stresses occurred. This block will be discussed here.

The deformation of this block in the situation determined by model 60 mm-stiff is shown in figure 9. It is shown that the highest reactions must occur at the edges of this block. This was also shown in figure 8.

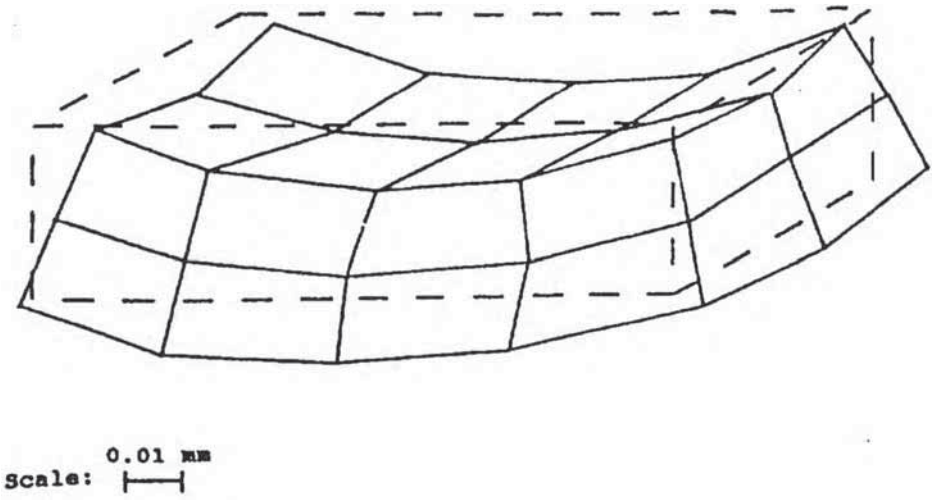

Figure 9. The deformation of the concrete paving block in the load centre in model 60 mm-stiff.

Applying the forces obtained from the previous global models at one single block also gives us the stress distribution in this single block Although the load distribution is not unambiguous the maximum tensile stresses in the middle of the block are hardly dependent on the way how the are introduced into the block

The highest tensile stresses appeared in the middle of the concrete paving block loaded by forces determined with model 60 mm-stiff. This tensile stress was 1.97 N/mm^2. For model 80 mm-stiff this stress was 1.23 N/mm^z, while for model 80 mm-weak 1.14 N/mm^2 was found.
This shows that the thickness of the used concrete paving blocks has a substantial influence on the tensile stress occurring within the block The properties of the joints do not really influence these stresses.

Since the calculated stresses are not high enough to cause fracture, it is assumed that direct contact between two or more concrete paving blocks under traffic loading is more likely a source of block damage (spalling of the edges). This assumption is based upon calculations of the maximum allowable permanent deformation to avoid direct contact.

3.5. Block damage due to permanent deformation

In the finite element models the calculated resilient horizontal compression of the joints, due to a 50 kN traffic load, was about 0.1 mm in all cases. Assuming that the resilient deformation of a concrete block pavement always reduces the joint width by about 0.1 mm, the total joint with minus 0.1 mm can be reduced by permanent deformation.
Assuming that the permanent deformation (rutting) has the form shown in figure 10, this deformation is equal to: d = dm * sin (3.14/b * x), where d is the rut depth x mm out of one side of the rut, that has a width of b mm.

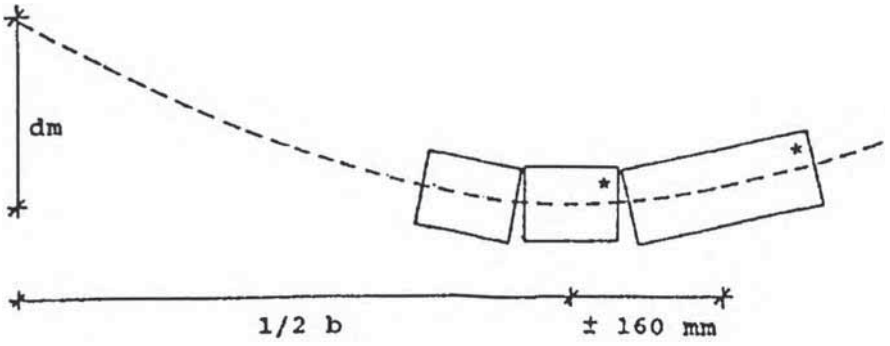

Figure 10. The assumed permanent deformation (rutting) of a concrete block pavement.

The rotation of the two marked blocks in figure 10, compared to each other, is: dm * 3.14/b * sin (3.14/b * 160).

The maximum allowable rotation is: (v - 0.1)/(h/2 - 3), where h is the block thickness (mm) and v is the joint width at 1/2 h (mm). This means that 3 mm under the upper side of the blocks direct contact is assumed to occur. Thus the shape of a concrete paving block (more specificly a 3 mm chamfer) has been taken into account (figure 11).

When the two formulas are equated, the results shown in figure 12 are obtained. It should be noted that the results shown in figure 12 are based upon considerations concerning ideal concrete block pavements in which the joint width is not variating. Since the joint width in real pavement structures is indeed variating, "v" has to be seen as the minimal joint width occurring in the pavement structure. It is now clear that, even when small permanent deformations exist, the danger of direct contact is realistic, especially for thick concrete paving blocks!

The determined danger of direct contact implies that design methods should subscribe a minimal joint width. The Dutch design method presented by the Centre R.O.W is indeed subscribing a minimal joint width and is now being being verificated (7,8,9).

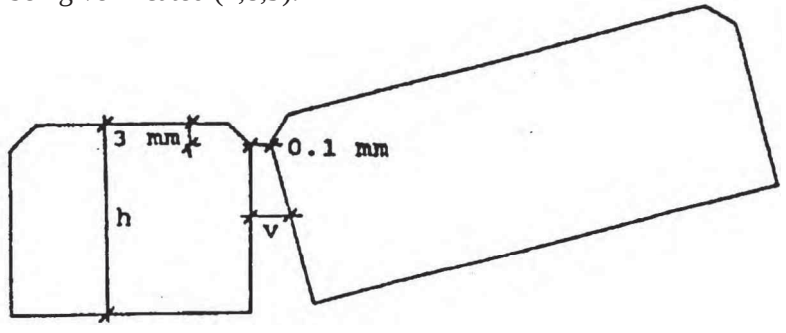

Figure 11. The maximum allowable rotation between two concrete paving blocks.

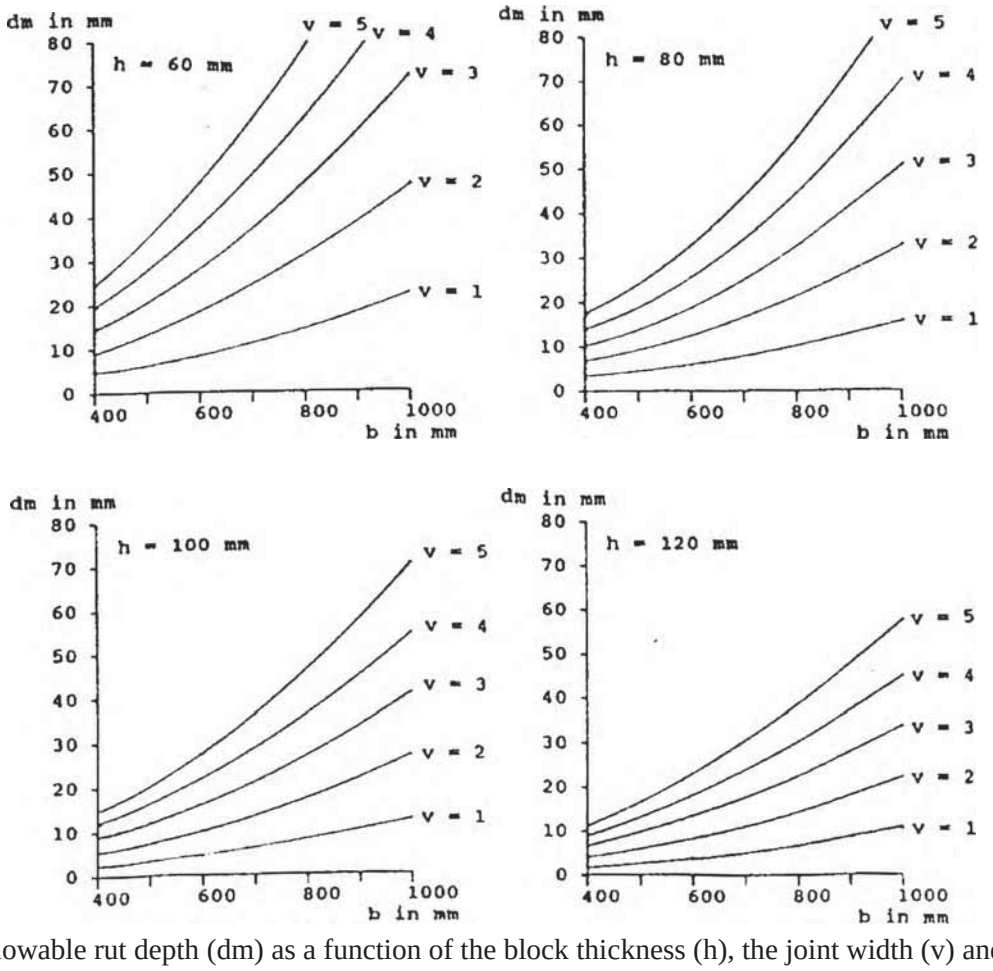

Figure 12 The allowable rut depth (dm) as a function of the block thickness (h), the joint width (v) and the rut width (b); all dimensions in mm.

4. CONCLUSIONS

Two useful finite element models for the analysis of the behaviour of concrete block pavements have been developed. Using those models it is shown that the properties of the concrete block layer hardly influence the behaviour of the total concrete block pavement structure. This means that it is not realistic to assume that the use of thick, heavy concrete paving blocks will improve the total structure in an important way. The only requirement a concrete paving block has to meet is that under traffic no damage (fracture, spalling of edges) should occur.

The computed stresses within the concrete blocks show that rectangular concrete paving blocks, heavier than 4.3 kg and thicker than 80 mm, are not needed to avoid fracture. It is very likely that spalling of the edges is caused mainly by direct contact of the blocks in the case of rutting or any other permanent deformation. Direct contact will introduce high stresses in the blocks due to traffic loads.

5. REFERENCES

1 Milder, G.J.W., Institute for vocational training in Civil Engenering
The human aspects of concrete block paving
Procedings Fourth International Conference on Concrete Block Paving, Auckland, 1992

2 Vring, JJ.M. van der, LJ.M. Houben
Paving concrete blocks
Procedings Fourth International Conference on Concrete Block Paving, Auckland, 1992

3 Concrete paving blocks - Standards and specifications; Second edition (in Dutch)
NEN 7000, Netherlands Institute for Standardization, Delft, 1985

4 Kok, A.W.M., C.F. Vrijman and A de Boer
ICES STRUDL - Part 1: Frame structures
- Part 2: Continuous structures
Delft University of Technology, Delft 1986

5 Houben, L.J.M., A.A.A. Molenaar, G.FLAM. Fuchs and H.O. Moll
Analysis and design of concrete block pavements
Proceedings Second International Conference on Concrete Block Paving,
Delft University of Technology, Delft 1984

6 Kellersmann, G.H., J. van der Kloos ter, G.R. Bosch, E Beuving,
A.A.A. Molenaar and H.O. Moll
Design method for concrete block pavements
Proceedings Second International Conference on Concrete Block Paving,
Delft University of Technology, Delft 1984

7 Houben, LJ.M. et al. (Working Group D3 'Design of small Element pavements' of Centre R.O.W)
The Dutch design method for concrete block road pavements
Proceedings Third International Conference on Concrete Block Paving, Rome, 1988

8 Houben, LJ.M. et al. (Working Group D3 'Design of small Element pavements' of Centre R.O.W)
First verification of the Dutch design method for concrete block road pavements
Procedings Fourth International Conference on Concrete Block Paving, Auckland, 1992

9 Huurman, M., LJ.M. Houben, A A. A. Molenaar and A.W.M. Kok
The Shear Failure Mechanism in Concrete Block Pavements with a Sand Sub-Base only
Procedings Fourth International Conference on Concrete Block Paving, Auckland, 1992